TOPICAL REVIEW

Situating homeostasis in organisms: maintaining organization through time

William Bechtel[1] and Leonardo Bich[2]

[1]*Department of Philosophy, University of California, San Diego, CA, USA*
[2]*Department of Philosophy, IAS-Research Centre for Life, Mind and Society, University of the Basque Country (UPV/EHU), Donostia-San Sebastian, Spain*

Handling Editors: Kim Barrett & Russell Hepple

The peer review history is available in the Supporting Information section of this article (https://doi.org/10.1113/JP286883#support-information-section).

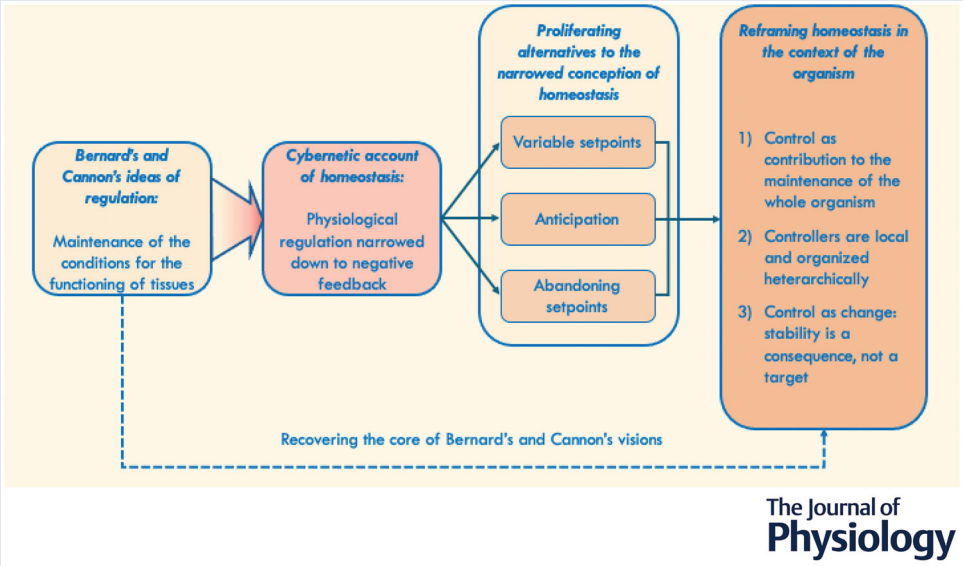

Abstract figure legend Bernard and Cannon advanced a broad understanding of physiological regulation which was narrowed to negative feedback by the cyberneticists. In response, critics offered a variety of additional concepts. These can be fitted to Bernard's and Cannon's original vision by recognizing that control functions in the context of an organism.

William Bechtel is Distinguished Professor Emeritus in the Department of Philosophy and a member of the Centre for Circadian Biology at the University of California, San Diego. His research addresses discovery and explanation in the life sciences, including neuroscience and cognitive science. He is co-author of *Discovering Complexity: Decomposition and Localization as Strategies in Scientific Research* (Princeton, 1993, MIT Press, 2010) and *Philosophy of Neuroscience* (Cambridge, 2022), and author of *Discovering Cell Mechanisms: The Creation of Modern Cell Biology* (Cambridge, 2006). **Leonardo Bich** is Associate Research Professor at the IAS-Research Centre of the University of the Basque Country (Spain). He has worked at the University of Bergamo, the CNRS, the Universidad de Chile and the University of Pittsburgh. His research is focused on theoretical and epistemological issues related to biological organisation, autonomy and control and on their implications for investigations in Theoretical Biology.

© 2024 The Author(s). *The Journal of Physiology* published by John Wiley & Sons Ltd on behalf of The Physiological Society. DOI: 10.1113/JP286883

This is an open access article under the terms of the Creative Commons Attribution License, which permits use, distribution and reproduction in any medium, provided the original work is properly cited.

The Journal of Physiology

Abstract Since it was inspired by Bernard and developed and named by Cannon, the concept of homeostasis has been invoked by many as the central theoretical framework for physiology. It has also been the target of numerous criticisms that have elicited the introduction of a plethora of alternative concepts. We argue that many of the criticisms actually target the more restrictive account of homeostasis advanced by the cyberneticists. What was crucial to Bernard and Cannon was a focus on the maintenance of the organism as the goal of physiological regulation. We analyse how Bernard's and Cannon's broad conception of what was required to maintain the organism was narrowed to negative feedback, characterized in terms of setpoints, by the cyberneticists and demonstrate how many of the alternative concepts challenge the role of setpoints – treating them as variable in light of circumstances or in anticipation of future circumstances, or as dispensable altogether. To support our analysis, we draw on the experimental and theoretical work on thermoregulation, a phenomenon that has been considered as a paradigmatic example of homeostasis and has been a common focus of those advancing alternative concepts. To integrate the insights advanced by the original proponents of homeostasis and the theorists proposing replacement notions we advance a framework in which regulation is viewed from the perspective of maintaining the organism.

(Received 8 May 2024; accepted after revision 11 September 2024; first published online 9 October 2024)
Corresponding author W. Bechtel: Department of Philosophy, University of California, San Diego, La Jolla, CA, USA. Email: wbechtel@ucsd.edu

Introduction

Since its introduction by Cannon, the concept of *homeostasis* has played a central, organizing role in biological theorizing. Drawing upon Bernard's characterization of warm-blooded organisms as maintaining the fixité of their internal environments, Cannon chose the term *homeostasis* in recognition that the states organisms maintain are not fixed; rather, they vary while remaining similar to each other. Moreover, he emphasized that maintaining such states requires the active and coordinated effort of different compensatory physiological mechanisms ('agencies' in Cannon's terminology). There has also been a long history of theorists who have viewed homeostasis as too limiting to characterize what organisms do to maintain themselves (Hagen, 2021). Many of these critics have proposed replacement terms that substitute for one or other component of the term *homeostasis* – for example, *rhesis* for *stasis* in *homeorhesis* or *allo* for *homeo* in *allostasis*. A feature of many of the replacement conceptions is a recognition that what is being maintained can change over time. While it is implicit in these accounts that ultimately it is the organism that is being maintained through homeostasis or related processes, we propose that the debates over homeostasis have been handicapped by centring on individual mechanisms, setting negative feedback mechanisms against alternatives, rather than focusing on the organism as the reference point. The organism is both what is maintained and what deploys different mechanisms as needed to maintain itself. In line with recent work emphasizing the importance of focusing on organisms to provide explanations in biology, we argue that the physiological phenomena considered under the notions of homeostasis and its competitors are best understood in the context of the organism. By foregrounding organisms and understanding them as dynamically organized adaptive systems that maintain themselves through time by coordinating the activities of their constituent mechanisms, we propose to provide a framework for integrating the insights advanced by the original proponents of homeostasis and the theorists proposing replacement notions (for other theorists that have also emphasized the neglected centrality of the organism as a unit in biology see Gilbert and Sarkar (2000), Cornish-Bowden (2006), Bich and Damiano (2008), Nicholson (2014), Moreno and Mossio (2015) and Baedke (2019)).

We begin ('Introducing a broad understanding of homeostasis: Bernard and Cannon') by describing how Bernard introduced the concept of the 'constancy of the internal environment' and Cannon the concept of 'homeostasis' in their attempts to understand an important feature they observed in living organisms – that many of their activities serve to maintain conditions in which their tissues and organs can continue to function to their benefit. We then show ('Narrowing the perspective: the cyberneticists and negative feedback') that while the focus of Bernard and Cannon was on how organisms maintained the conditions under which their tissues and organs could operate, and therefore they could continue to live, researchers within the Cybernetics movement narrowed the focus to a specific type of mechanism through which the activities of organisms are regulated.

© 2024 The Author(s). *The Journal of Physiology* published by John Wiley & Sons Ltd on behalf of The Physiological Society.

Specifically, they identified homeostasis with negative feedback mechanisms that maintain individual physiological variables at specific setpoints.

Although the focus on negative feedback spurred important research, a host of investigators have argued that it resulted in the neglect of the much broader range of strategies organisms employ to maintain themselves. In response, as we next discuss ('Proposed replacements for the concept of homeostasis'), these researchers have advanced a variety of concepts to supplement or supplant homeostasis. In arguing for these alternative concepts, researchers have pointed to important control mechanisms through which organisms regulate their physiology. We then argue, however, that they fail to provide an integrated account of such control insofar as they do not provide an account of how these control processes relate to the organism that generates and uses them ('Maintaining the organism: reintegrating homeostasis and its competitors'). We develop an account according to which, as products of evolution, organisms are heterarchical networks of mechanisms, each created by the network itself. Some of these mechanisms carry out the construction and repair activities, and many more perform regulatory activities that enlist and control those doing the construction and repair. This understanding of organisms as integrated networks of mechanisms is in the spirit of Bernard's and Cannon's investigations and enables a comprehensive framing of homeostasis that can integrate the various accounts of regulatory control they and their critics have advanced.

As a touchstone for our analysis, we will discuss throughout the paper a particularly important variable that animals regulate and that constitutes a common focus of research on homeostasis mechanisms starting from Bernard's experiments in physiology (Holmes, 1986) – the temperature of their abdominal and thoracic viscera and, if they have one, their brains (our discussion is heavily informed by relatively recent detailed reviews by Romanovsky (2018) and Tan and Knight (2018)). This is often referred to as core or deep body temperature. Core body temperature is a critical factor in determining the rate of the chemical reactions that sustain any organism. Liquid water, which is necessary for most biochemical reactions, freezes at 0°C. Human fluids freeze around −1.8°C. Thus, most organisms cannot tolerate a core temperature below those values. Around 45°C proteins begin to denature and activities such as DNA and protein synthesis are impaired; hence, most animals cannot tolerate a core temperature above 45°C. For invertebrates and vertebrates such as fish, amphibians and reptiles, core temperature is primarily determined by ambient temperature; accordingly, they maintain (usually through behaviours that place them in an environment with a desired ambient temperature) a temperature in the lower portion of the range from around 0°C to 45°C. Birds and mammals, on the other hand, are endothermic, generating their own heat, which enables much more rapid metabolism. As a result, they typically maintain a core temperature in the higher end of the range – 37°C is regarded as normal body temperature for humans. We will focus on mammals, which have a variety of strategies, both behavioural and physiological, to regulate their core temperature. Behavioural activities are typically the first response to changes in ambient temperature and include such responses as adopting different postures (e.g. curling up to maintain warmth) and moving to different locations (e.g. going into a burrow). However, in many contexts these are not available (e.g. during sleep or when injured) and mammals are then able to employ physiological responses. Among the physiological activities available to mammals are to increase or decrease heat conduction through their skin by vasodilatation or vasoconstriction, to sweat or shiver, and to generate heat through metabolism, especially in brown adipose tissue (BAT). The challenge is to regulate these activities so as maintain temperatures that are appropriate for their metabolic activities.

In the mid-20th century, many researchers focused on how temperature was controlled by a negative feedback system that maintained a target setpoint. In the section 'Narrowing the perspective: the cyberneticists and negative feedback', we will illustrate the cyberneticists' account of control in terms of these accounts of thermoregulation. The field of thermoregulation has witnessed significant conceptual shifts in recent years that corresponds to changing thinking about homeostasis. Accordingly, in the section 'Proposed replacements for the concept of homeostasis' we will illustrate the proposed alternatives to homeostasis in terms of these more recent approaches to thermoregulation. Quite reasonably, researchers limit their focus to specific phenomena in the course of studying them. Thus, the research we discuss in these two sections focuses on the regulation of temperature. But the actions of maintaining temperature place demands on other physiological and behavioural activities. Accordingly, in the section 'Maintaining the organism: reintegrating homeostasis and its competitors', we will consider how thermoregulation is integrated into the more encompassing activity of maintaining the organism.

Temperature is just one variable that exhibits homeostasis. Nearly every physiological activity is regulated to maintain conditions suitable for other physiological activities. Accordingly, one encounters discussions of glucose homeostasis (Röder et al., 2016), water homeostasis (Delpire & Gagnon, 2018), redox homeostasis (Ursini et al., 2016), cardiovascular homeostasis (Parati et al., 2020) and many others. Many of the same issues as we discuss here arise with respect to these phenomena, but we do not have the space to address them.

© 2024 The Author(s). *The Journal of Physiology* published by John Wiley & Sons Ltd on behalf of The Physiological Society.

Introducing a broad understanding of homeostasis: Bernard and Cannon

The origin of the notion of homeostasis is commonly traced to Bernard's assertion, in his last publication: 'The constancy [fixité] of the internal environment is the condition for free and independent life' (1878, p. 113). There are several features of this oft-cited passage that are typically neglected. First, it appears in a discussion of three forms of life and only applies to the third form, which he characterizes as 'constant or free' (the other two are latent, as in seeds and hibernating animals, and oscillatory, as in plants, invertebrates and coldblooded vertebrates whose activities vary with varying conditions in their environments). In free and independent life 'life. . . unrolls along a constant course, apparently indifferent to the variations in the cosmic environment, or to the changes in the material conditions that surround the animal.' This form of life is only realized in birds and mammals (and not at all times in them). Second, by 'internal environment' Bernard refers not to the whole interior of the organism but to the 'the lymph or plasma, the liquid portion of the blood which in the higher animals perfuses the tissues and constitutes the ensemble of all the interstitial fluids, is an expression of all the local nutritions, and is the source and confluence of all the elementary exchanges.' Third, even though Bernard used the term translated as 'constancy' [fixité], he continues 'the mechanism that makes it possible is that which assures the maintenance within the internal environment of all the conditions necessary for the life of the elements.' Later, he states 'all the vital mechanisms, however varied they might be, always have one purpose, that of maintaining the integrity of the conditions for life within the internal environment.' This suggests that what the free animal maintains is not literally constancy but conditions sufficient for the activities of life to proceed. Finally, maintaining these conditions involves dynamic responses to the environment: 'far from being indifferent to the external world, the higher animal is on the contrary in a close and wise relation with it, so that its equilibrium results from a continuous and delicate compensation established as if by the most sensitive of balances.' In recognition of the dynamics that results from this engagement, Yates (1996), argued that *stability* better captures Bernard's perspective than *constancy*: stability, he notes, 'may be motional, as in limit cycles, tori, or chaotic attractors in topological models' (p. 680). While acknowledging that *stability* is more apt than *constancy* for characterizing Bernard's view, our contention is that it is not stability *per se* that is central but how it contributes to the maintenance of the conditions for life.

As Holmes (1986) analyses in great detail, during a 20 year period Bernard developed his understanding of how birds and mammals exhibit a 'free and independent' mode of life in his annual lectures at the Collège de France. In his first lecture, *Leçons sur les propriétés physiologiques et les altérations pathologiques des liquides de l'organisme* (Bernard, 1859), he drew upon Robin's (1853) characterization of the fluids of the body as the 'milieu de l'intérieur' and as comprising 'the conditions of action' for the solid tissues of the body. Bernard develops this perspective according to which the tissues of the body 'are, in reality, removed from direct external influences and protected by a true internal environment (milieu interieur) mostly constituted by fluids circulating in the body' (Bernard, 1859, p. 9).

Temperature is one of the variable traits of the blood on which Bernard focuses. Traditionally blood was thought to produce heat, but based on detailed temperature measurements, Bernard concluded that heat was generated in the various tissues of the body and blood served to equalize temperature through the body. Beyond that, he focused on how the blood served to protect the tissues of the body from different temperatures. Bernard (1859, p. 52) wrote: 'It can be said that, in higher animals, tissues do not really feel the effects of temperature of the environment because they are steeped in another environment, a liquid internal environment which is the blood wherein the organs live like the embryo in the fluids which surround him. . . the animal carries in itself an environment which has its own temperature, 38°C–40°C. Therefore, it is here that one should look for the mechanism whereby an animal can maintain a constant temperature in spite of such large variations of the external temperature.' He also sketched a mechanism by which a stable temperature might be maintained: 'the constancy of temperature results from a sort of equilibrium between acquisitions [from tissues] and losses [to the tissues]. This equilibrium between production and loss is regulated by the nervous system' (p. 150; translation by Holmes). Bernard's idea seems to be that when one part of the body produces heat through its activities and so warms the blood adjacent to it, that blood is transported elsewhere to cool down. In his final work, Bernard (1878) continued to treat temperature as 'closely fixed' by an 'ensemble of mechanisms.' He did not envision the organism working to maintain absolute constancy, but only conditions within the range in which the tissues could function without impairment. He also drew a contrast with organisms other than birds and mammals: because they could not maintain these conditions within the required range, their ability to perform the activities of life varied as the external environment varied. He illustrates this with frogs: when temperature in its environment falls, a frog's activity diminishes; when it raises, activity increases. (More recently, researchers have discovered that some organisms, including some fishes, actively generate heat by contracting their muscles; Block, 1994.)

Echoing Bernard's focus on the range of conditions mammals must maintain in their internal environment,

© 2024 The Author(s). *The Journal of Physiology* published by John Wiley & Sons Ltd on behalf of The Physiological Society.

Cannon (1929) also does not speak of absolute constancy, but of maintaining conditions that are 'fairly constant' and emphasizes the dynamic processes involved. Although Bernard had invoked the concept of equilibrium, Cannon rejects it because he sees it as entailing a balancing of forces in a closed system and it is usually associated with much simpler physicochemical systems. Instead, he introduces the new term *homeostasis* to describe the 'coordinated physiological reactions' involved in maintaining these conditions:

> The highly developed living being is an open system having many relations to its surroundings—in the respiratory and alimentary tracts and through surface receptors, neuromuscular organs and bony levers. Changes in the surroundings excite reactions in this system, or affect it directly, so that internal disturbances of the system are produced. Such disturbances are normally kept within narrow limits, because automatic adjustments within the system are brought into action, and thereby wide oscillations are prevented and the internal conditions are held fairly constant… The coordinated physiological reactions which maintain most of the steady states in the body are so complex, and are so peculiar to the living organism, that it has been suggested (Cannon, 1926) that a specific designation for these states be employed—homeostasis. (1929, p. 400)

He goes on to explain that he employed 'homeo' as an abbreviation for *homoio*, the Greek word for similar, not 'homo' to make explicit that what was maintained was not the same state but only a similar one that 'admits some variation.' While he uses the word *stasis* in the term, he constantly refers to *conditions*.

Following the lead of Bernard, Cannon centres his discussion on the fluid matrix in which all tissues reside. He focuses on several conditions, including temperature, that need to be maintained with a target range (not at a specific value) and relates the risks to the organism when values fall too far outside the range. With respect to temperature, he asserts: 'The normal daily variations of body temperature in man range between 36.3°C and 37.3°C; though it may fall to 24°C and not be fatal, that level is much lower than is compatible with activity; and if the temperature persists at 42−43°C, it is dangerous because of the coagulation of certain proteins in nerve cells.' He describes how, when temperature rises, blood vessels relax so that warm blood is passed near the skin surface from which it can escape and, if that does not suffice, sweating is facilitated. When temperature falls, blood vessels are constricted, and hair and feathers form a protective layer. If that is insufficient, adrenaline is released into the blood to initiate heat production. If a further response is needed, shivering is induced. Cannon comments on this set of procedures:

> This highly efficient arrangement for maintaining homeostasis of body temperature involves only an acceleration or retardation of the processes of heat production and heat loss which are constantly going on… The noteworthy features of the total arrangement, apart from its efficiency, are the varieties of the devices for homeostasis, their appearance in a sequence of defences against change, and the close involvement of the sympathetic system in the conservation, production and dissipation of heat (Cannon, 1929, p. 422).

In sum, in emphasizing the importance in organisms such as mammals of maintaining critical variables within restricted ranges, neither Bernard nor Cannon argued for maintaining them at fixed values. Both emphasized the role of liquids such as blood as protecting tissues from environmental disturbances and providing the conditions needed for tissues to perform their activities. They also often defend a view of regulation as a 'defence against change' that can be harmful for the system. The core ideas employed to characterize physiological regulation are the stability and the dynamic nature of this internal environment, which is maintained relatively stable thanks to the action of a host of regulatory mechanisms that act on it in response to external stimuli.

Narrowing the perspective: the cyberneticists and negative feedback

In the decade after Cannon introduced the term homeostasis, theorists from a number of traditions converged on the idea that negative feedback – inhibiting an activity when its output varied from a target – provided the process by which organisms realized homeostasis. These theorists did not invent negative feedback; designers of technologies had repeatedly arrived at this strategy over many centuries (Mayr, 1970). Some of the proponents of regulation by negative feedback had been involved in developing technologies such as missiles that detected temperature at different locations in front of the missile and, when the hottest spot was off to one side, activated turning mechanisms so that the hottest spot was directly in front. This inspired the idea that negative feedback enabled systems to direct themselves to goals. It further inspired efforts to explain teleological behaviour that had presented challenges to both ancient and modern science since Aristotle. Rosenblueth et al. (1943, p. 24), for example, argued 'Teleological thus becomes synonymous with behaviour controlled by negative feed-back and gains therefore in precision by a sufficiently restricted connotation.' (For a criticism of the cybernetic approach to teleology as not taking into account the organism, or the wider system the feedback mechanism is part of, see Jonas (1953), Mossio and Bich (2017), and Sachs (2023).) Building on this idea, beginning in 1946 Wiener organized a series of Macy Conferences that advanced

© 2024 The Author(s). *The Journal of Physiology* published by John Wiley & Sons Ltd on behalf of The Physiological Society.

negative feedback (characterized as circular causation) as a central explanatory concept for explaining biological, behavioural and social phenomena, all of which previously presented a challenge to science because they exhibited goal-directedness (Pias & Von Foerster, 2016). Soon after, Wiener (1948) introduced the term *cybernetics*, from the Greek term for a person steering a ship by redirecting it in the opposite direction whenever the ship deviated too far from the course in one direction. This became the name for the movement.

Engineered negative feedback systems are designed to maintain a constant value of the target parameter, referred to as the 'setpoint', by comparing the actual value of the parameter to the setpoint and when they do not match, initiating corrective action. In some engineered negative feedback systems, such as the governor Watt designed for the steam engine, the setpoint is fixed in the design of the system. In others, such as thermostats, the setpoint is adjustable. This framing of negative feedback control as operating to maintain a variable at a setpoint was adopted to characterize physiological systems (Ramsay & Woods, 2014). In particular, when they observed organisms maintaining relatively constant states, some physiologists inferred this was due to a mechanism in which comparator, integrator and controller processes were operative: current values were compared to the setpoint and elicited effectors when the current values and setpoint did not match. Accordingly, they equated homeostasis with control via negative feedback. This is evident in two prominent characterizations of homeostasis:

> Cannon's word, homeostasis embraces the fixed, or constant, internal environment, but then goes on to suggest dynamic, self-regulating processes that serve to maintain that constancy or to return the internal environment to normal should it get out of whack. This is the concept now referred to as negative feedback… (Langley, 1965).

> The term homeostasis is used by physiologists to mean maintenance of static, or constant, conditions in the internal environment… Essentially all … control mechanisms of the body … operate by the process of negative feedback (Guyton, 1982).

Researchers investigating core temperature regulation in mammals applied this framework. Magoun et al.'s (1938) discovery that neurons in the preoptic area (POA) of the hypothalamus are particularly responsive when heat is applied pointed researchers to a potential locus of the feedback mechanism. This was supported by subsequent research that revealed that after lesions to the POA, physiological responses to heat or cold were eliminated. In addition, the POA was shown to receive inputs from thermosensory neurons elsewhere in the brain, such as bipolar neurons in the nodose and dorsal root ganglia of the brainstem that extend splanchnic and vagal afferents into viscera such as the oesophagus, stomach and large intra-abdominal veins. In addition, efferent neurons project from it to various effectors – to brown adipose tissue (BAT), where they initiate thermogenesis and shivering, to the dorsal medial hypothalamus and then to the rostral raphe pallidus, where they cause vasoconstriction in the skin, and to the rostral raphe pallidus and the rostral ventrolateral medulla, where they initiate noradrenaline release from sympathetic nerves enervating smooth muscle in the skin to produce sweating and acetylcholine release from the rostral medial medulla, which activates peripheral sweat glands.

In light of these findings, many researchers came to view the POA as the control centre that integrates multiple thermosensory signals to determine core body temperature, compare the result with the setpoint, and initiate responses when measured values differed from the setpoint. Drawing on numerous studies showing that modulating the temperature of the POA itself resulted in behavioural and physiological responses such as panting or shivering by the organism, Hammel (1965) developed a mathematical model of the negative feedback processes in the POA. At its core is what he termed the 'law of the controlling system' (Fig. 1):

$$R - R_o = \alpha_R \left(T_h - T_{set}\right)$$

in which R is the regulated metabolic level, R_o is the basal metabolic level, $R - R_o$ is the thermoregulatory response, T_h is the temperature of the hypothalamus and T_{set} is the temperature setpoint. The equation describes a basic feedback process. Hammel hypothesized four types of neurons in the hypothalamus that performed the requisite roles: warm-sensitive neurons that sensed T_h, temperature-insensitive neurons that specified T_{set}, and heat loss and heat production neurons that carried out responses specified by $R - R_o$. Boulant (2006) describes recent findings that elaborate features of Hammel's model. For example, warm-sensitive neurons in the hypothalamus respond both to hypothalamic temperature

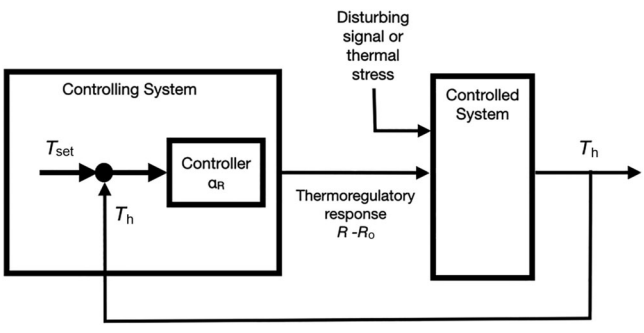

Figure 1. Hammel's account of negative feedback
The feedback of T_h to interact with T_{set} to determine a thermoregulatory response ($R - R_o$) in response to disturbing signal or thermal stress

© 2024 The Author(s). *The Journal of Physiology* published by John Wiley & Sons Ltd on behalf of The Physiological Society.

and, via dendrites medially and laterally, to cutaneous temperature. The dendrites of the temperature-insensitive neurons are oriented differently, which he proposes may contribute to their role in maintaining a setpoint. We will return to Hammel's model in the following section.

Proposed replacements for the concept of homeostasis

While many physiologists have adopted the cyberneticists' construal of homeostasis as a corrective mechanism that detects displacements of a physiological variable from a target value and restores it to that value through negative feedback, others have objected that negative feedback is just one of the mechanisms through which organisms regulate their internal state. In many cases these critics have advanced alternative concepts to designate these processes. They all share a dynamic view of physiological regulation that challenges the narrow idea of homeostasis as return to an initial state (or as error correction) inherited from cybernetics.

As shown in Hagen's (2021) historical reconstruction, the first studies of homeostatic processes were severely limited due to being carried out on specific variables in adult organisms maintained in controlled invariant laboratory conditions rather than living in their usual environments which are often characterized by radically changing conditions and requirements. Besides developing and improving techniques that facilitated measuring new variables such as blood gases and investigating the functioning of organs, extensive work has been carried out to study how organisms modify their physiological regimes in response to stress, to changing environmental conditions or to the stage of their daily, seasonal and life cycles. The study of the regulation of body temperature in ecological contexts such as desert and artic conditions carried out in the fifties by Knut Schmidt-Nielsen, George Bartholomew, Laurence Irving and Per Scholander, among others, established that in many organisms there is not a normal body temperature that is maintained. Instead, temperature varies adaptively over the course of a day and in different parts of the body depending on the needs of the organism as it faces changing environmental conditions.

The arguments we discuss below that criticize the cybernetic treatment of homeostasis and develop and defend alternatives draw upon data from a broad range of experimental studies. One source of data are studies identifying and investigating neural circuits involved in thermoregulation through techniques such as lesions and chemical and electrical stimulation of brain areas, electrophysiological analysis, etc. (see, for example, Nagashima et al., 2000). Other sources are measurements of core body temperatures and changes in threshold values for thermoeffectors (e.g. cold and heat defence effectors) in different conditions such as lipopolysaccharide fever, starvation, limb ischaemia, administration of anaesthetics, etc. (see, for example, Romanovsky, 2004).

In this section, we focus on three groups of critics that target the role of setpoints in the characterization of homeostasis: one arguing for variable rather than fixed setpoints to be maintained, one emphasizing the importance of anticipatory modification of setpoints, and one proposing to abandon setpoints altogether. These are not the only alternatives that have been put forward: for example, Waddington (1957) introduced *homeorhesis* ('stabilized flow rather than stabilized state'), Nicolaïdis (1977) coined *homeorheusis* (rheusis for flow), while Yates (1994) introduced the term *homeodynanics* (see also Rattan, 2007).

Variable setpoints: heterostasis and rheostasis. Selye (1973) was one of the first to argue that animals can alter the target value for the variables they act to maintain. His career was devoted to investigating how animals respond to stressors, including foreign chemicals and normal body constituents in concentrations that greatly exceed physiological levels. He distinguished two responses – destroying the stressor or changing the conditions maintained in the organism. It was the latter that led him to coin the term *heterostasis*:

> When such an abnormal equilibrium must be established to protect against potential pathogens, I propose to speak of *heterostasis* (heteros = other; stasis = fixity) as the establishment of a new steady state by exogenous (pharmacologic) stimulation of adaptive mechanisms through the development and maintenance of dormant defensive tissue reactions… The most salient difference between homeostasis and heterostasis is that the former maintains the normal steady state by physiologic reactions, whereas the latter 'resets the thermostat' to maintain a higher state of defense by artificial exogenous intervention (p. 443).

Selye construed this new concept as fully in the spirit of Bernard and Cannon (Selye was the one researcher not a student of Cannon's whose work was included in a volume dedicated to Cannon; Selye, 1975). He took himself to simply be adding to Cannon's focus on short-term homeostatic responses to stressors the recognition that animals make longer-term adjustments.

Selye's reference to resetting the thermostat embraces accounts of feedback control that invoke setpoints but treats them as adjustable, like settings in a thermostat, when the animal confronts exceptional conditions that threaten its survival. Hammel, whose feedback model for regulating body temperature we introduced above, also proposed treating the setpoint for temperature regulation as adjustable (Hammel, Jackson, Stolwijk, Hardy, &

© 2024 The Author(s). *The Journal of Physiology* published by John Wiley & Sons Ltd on behalf of The Physiological Society.

Stromme, 1963). He extended his model as in Fig. 2 in which T_{set} is modifiable by the action initiated by another variable (T_{skin}) for temperature registered at the skin. In support of adjustment, he cited results from experiments on dogs showing that T_{set} was lowered in warmer environments (38.8°C in a 23°C environment) and raised in colder environments (41°C in a 13.3°C environment). He elaborates on his proposal: 'when the skin temperature falls in a cold environment, the steady-state and phasic firing rates of cold receptors in the skin increase and elevate the set point so that the hypothalamic temperature, without changing, is below the set point and drives heat conservation mechanisms or increases heat production' (Hammel, 1965, p. 79).

Hammel continued to refer to homeostasis in his discussion of changing setpoints but Mrosovsky (1990) found the phenomenon to be sufficiently widespread and important to 'merit its own name, rheostasis' (p. 13). A little later he drew an analogy to rheostats designed by engineers: 'a rheostat precisely and vividly exemplifies a device whose setting may easily be adjusted.' Mrosovsky distinguished two forms of rheostasis: reactive and programmed. Here we consider only reactive rheostasis, deferring the discussion of programmed rheostasis to the next section.

Mrosovsky develops the interesting proposal that reports of organisms maintaining constancy may be artifacts of conducting research in laboratories. Although sheep in the laboratory maintain a fairly constant core body temperature that seldom exceeds 39.5°C, he reports that in the wild they often exhibit a temperature above 40°C or even 41°C without initiating compensatory panting. He also argues that changing the target temperature in the wild can be beneficial, illustrating the claim with research by Schmidt-Nielsen et al. (1957) showing that camels allow their temperature to rise to near 41°C during the day, and compensate for this in part by allowing their temperature to drop as low as 34.2°C (very low for a mammal) during the subsequent night.

Mrosovsky appeals to fever as a classic example of reactive rheostasis – when challenged by a pathogen, birds and mammals increase (in some cases decrease) the core temperature they maintain, for example humans shiver and add bedding to maintain a higher temperature. In addition to altering their target temperature, many sick animals reduce their eating below their normal intake. He proposes that these responses create less suitable environments for pathogens to maintain themselves and to reproduce. Mrosovsky also identifies examples of changes in thermoregulatory setpoints with stress, such as psychogenic hyperthermia exhibited by athletes before competitions or rats exposed to bright light. The mechanisms involved in psychogenic hyperthermia are not fully understood. However, it is believed that they are distinct from those involved in infectious or inflammatory fever (Oka & Oka, 2012), as stress-induced hyperthermia is elicited in rats deficient in proinflammatory mediators and their receptors. Stress that is known to evoke hyperthermia induces Fos, a marker of neuronal activation, in the dorsomedial hypothalamic nucleus and the rostral medullary raphe region (Nakamura, 2015; Oka & Oka, 2012). Fos expression is also observed in sympathetic premotor neurons controlling non-shivering brown adipose tissue thermogenesis and cutaneous vasoconstriction. Lesion studies suggest that in addition the preoptic area of the hypothalamus and the medial amygdala might be involved in exciting neurons in the dorsomedial hypothalamic nucleus. In both cases (infectious or inflammatory and psychogenic hyperthermia), Mrosovsky interprets the fact that fever-reducing drugs (prostaglandin blockers) reverses hyperthermia as suggesting that the hyperthermia resulted from raising the set point. He speculates that raising the setpoint enhances muscle function. Mrosovsky is also sceptical of some claims to altered setpoint, such as the proposed reduction in setpoint after injury. In rats, injury renders it more difficult to elicit a heat loss response – not what one would expect with a reduction in setpoint. Likewise,

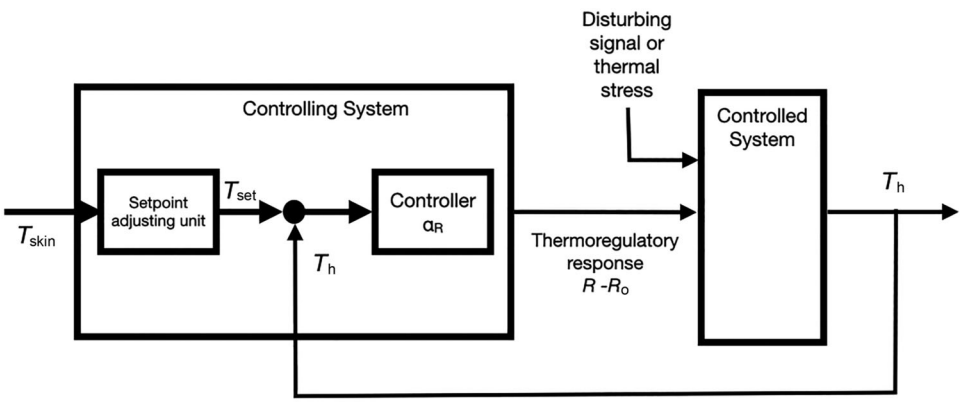

Figure 2. Hammel's proposal for modifying the setpoint in temperature regulation
Same as Fig. 1, but adding T_{skin} as acting to modify T_{set}.

© 2024 The Author(s). *The Journal of Physiology* published by John Wiley & Sons Ltd on behalf of The Physiological Society.

in considering the fact that some starving animals exhibit a lowered setpoint, he considers the possibility that it is due both to a reduced setpoint and also to impaired temperature signalling.

Anticipating future conditions: predictive homeostasis, programmed rheostasis, allostasis. The standard construal of homeostasis as negative feedback views the process as occurring only when the target variable changed from the setpoint. Hammel (1990), however, described how animals sometimes respond to a challenge even if the variable has not deviated from the setpoint. For example, after exposure to sudden cold, an animal may raise its body temperature beyond the setpoint even if its core body temperature had not declined. He characterized such responses to a stimulus that might indicate a future deviation from the target value as positive feedback. In this section we examine several theorists who have developed accounts of how such anticipatory responses figure in organisms maintaining their internal environment in such a way as to satisfy physiological needs under changing conditions and how this has resulted in the proposal of new concepts to supplement or replace homeostasis. To contrast it with feedback control, anticipatory control is described as feedforward control. In some literatures, such as that concerned with cardiovascular regulation in the context of exercise, feedforward control based on the anticipation of required effort is referred to as *central command* (see Williamson (2010) for a discussion of how somatosensory feedback affects the assessment of required effort and thus central command).

In a lecture dedicated to Cannon on the occasion of the 50th anniversary of his development of the concept of homeostasis, circadian biologist Moore-Ede (1986) confronted what seemed to be a conflict between circadian rhythmicity – endogenously generated oscillations of approximately 24 h in a wide range of physiological and behavioural variables – and homeostatic responses to keep conditions constant: 'At first glance the demonstration of endogenously generated rhythms in physiological variables which can persist independent of fluctuations in environmental conditions would seem to be antithetical to the very idea of homeostasis.' Moore-Ede, however, argued for reconciling the two by differentiating two varieties of homeostasis – 'reactive homeostasis—corrective actions in response to a change which has already occurred' and 'predictive homeostasis—corrective responses initiated in anticipation of a predictably timed challenge.' He motivates the importance of predictive homeostasis for the organism by noting that responding to a detected variation from target values may take a relatively long time (for example, if the response requires the synthesis of a new protein, it can take 1−2 h). If the animal can anticipate when a response will be needed, it can respond without delay. When organisms possess endogenous rhythms that correspond to changing conditions in their environment, they can employ them to initiate responses. (Two earlier circadian biologists anticipated Moore-Ede's approach to reconciling circadian oscillations with the understanding of homeostasis as restoring a variable to a setpoint. Referring to the setpoint as the base-line, Halberg (1953) proposed that it 'is not the straight line … [but] rather the curve of a 24-h cycle.' Aschoff (1964) proposed that circadian oscillations provide 'a mirror of the changing outside world in the internal organization.' Subsequently, he characterized circadian variation in temperature as 'nothing else than regular shifts of the set-point' (Aschoff, 1970).)

Moore-Ede illustrates predictive homeostasis with the circadian oscillation of body temperature in many animals, including humans. Wunderlich (1868) reported daily variability in normal human body temperature in the same study in which he established 37°C as normal body temperature. Subsequent research has demonstrated circadian oscillations in body temperature in a wide range of avian and mammalian species and some species of fish, reptile species and even invertebrates such as bees (Refinetti, 2010). Moore-Ede explicitly characterizes such circadian oscillations as involving 'an adjustment in the set point of the regulated core temperature.' He goes on to show how predictive and reactive homeostasis can interact. He described an experimental arrangement in which the dark phase for a squirrel monkey was delayed by 8 h. The next morning circadian anticipation resulted in an increase to 70% of active phase core temperature at the previous predicted beginning of the light phase. It only reached full active phase temperature once lights were turned on, presumably relying on reactive homeostasis to make the final adjustment.

Moore-Ede's discussion of predictive homeostasis was taken up by Mrosovsky (1990), who referred to *programmed rheostasis*, which he illustrated with mammalian hibernation. A major feature of hibernation is the reduction in body temperature. Bernard viewed hibernation as an animal surrendering free and independent life and, much like a seed, allowing its temperature to be determined by its environment. Hammel also viewed hibernation as a failure of homeostasis. Mrosovsky (1971) showed, however, that even during hibernation animals regulate their internal temperature so that it is generally a few degrees above the ambient temperature. He hypothesized that hibernating animals are still maintaining a setpoint, but a different setpoint. He argued that maintaining a setpoint even at a very cold temperature is advantageous since actually freezing is deadly. He describes experimental studies by Heller and quotes Heller, Colliver, & Beard's (1977, p. 58) conclusion: 'Clearly, then, hibernation is a state in which

© 2024 The Author(s). *The Journal of Physiology* published by John Wiley & Sons Ltd on behalf of The Physiological Society.

the mammalian regulator of Tb [core body temperature] is reset to a lower level, and it is not a state during which the thermoregulatory system is inactivated'. Mrosovsky draws attention to the fact that during hibernation, mammals periodically warm themselves, which he treats as due to them temporarily raising their hibernation setpoint. He argues that doing so enables the hibernating animal to eliminate end products of metabolism such as urea. To prevent production of more end products, he argues that animals reduce their body fat setpoint. But so as not to exhaust their energy supply, he contends animals raise their fat setpoint before hibernating to enable anticipatory fattening. These all involve changing setpoints in anticipation of future conditions.

One of the most prominent concepts proposed as an alternative to homeostasis is *allostasis*, first introduced by Sterling and Eyer (1988) to emphasize what they characterize as 'stability through change.' Although the changes they envisage are broader (including, for example, responses to stress conditions), Sterling (2004) presents anticipating situations and altering setpoints ('using prior information to predict demand and then adjusting all parameters to meet it') as distinguishing allostasis from homeostasis. He treats circadian rhythms as evolutionarily acquired anticipations of change (see also Schulkin & Sterling, 2019), but emphases learning as enabling organisms to acquire anticipatory changes in their lifetime. He goes on to characterize 'predictive fluctuation' as 'the hallmark of health'.

One example Sterling provides of predictive changes through learned associations is the anticipatory release of insulin by β-cells in the pancreas (resulting in increased glucose uptake by muscle and fat cells): rather than releasing insulin only after glucose has been ingested, an animal learns to initiate insulin release in response to stimuli associated with upcoming ingestions of glucose, such as the sight or smell of food. Interestingly, Sterling points out that Cannon included predictive responses, such as measured raises in blood glucose levels in Harvard football players that reached diabetic levels just before a game. Sterling nonetheless presents anticipatory changes to setpoints as what differentiates allostasis from homeostasis. Ramsay and Woods (2016) describe how other peptides, such as ghrelin, glucagon-like peptide, pancreatic polypeptide, and glucagon, are also released in anticipation of eating and act to initiate activities that lessen hyperglycaemia that would otherwise follow the rapid increase in blood glucose after eating.

Abandoning setpoints for balance points. The idea of modifying a setpoint suggests an activity like a human altering the temperature setting on a thermostat. On this view, the setpoint is physically instantiated. Hammel, for example, presented neurons in the POA as instantiating the setpoint. Recent accounts of thermoregulation have challenged such a literal interpretation of setpoints. Sometimes the term is employed in a purely descriptive manner, merely indicating that the system operates in a manner that maintains a certain value, without a commitment to any component of the system serving as a setpoint to which actual values are compared. On this usage, all that is claimed is that the system is operating 'as if' it had a setpoint. Thus, Ramsay and Woods (2014) assert 'In physiology, the term set point is used metaphorically to indicate that a regulatory system operates as if there was an engineering type of set point or reference signal, that is, a set point is a hypothetical construct that is inferred by assessing whether an animal defends a given value of one or another variable using behavioural and/or physiological responses.' Others challenge this metaphoric use as engendering potential misunderstanding. This is exemplified in a note appended to the Commission for Thermal Physiology of the International Union of Physiological Sciences' (2001) entry on set-point: the use of setpoint 'has evoked much confusion, as it has been used for different phenomena [including] a central reference signal (which obviously does not exist explicitly in the thermoregulatory system).'

One way the term *setpoint* is misleading is that it suggests there is just one feedback system operating to maintain a variable such as core body temperature. Even during the heyday of cybernetic models employing setpoints, Satinoff (1978) advocated for a 'multiple integrator model … in which sensing and integrative functions occur at many levels of the nervous system with higher levels facilitating, inhibiting, and coordinating those below.' As a first step in arguing for multiple controllers, he describes experiments in which the POA of a rat is lesioned. Even as this impaired the rat's autonomic responses, it was still able to initiate behavioural responses, indicating it had 'sufficient thermosensitive cells and integrative neurons outside the preoptic area' to respond behaviourally to temperature challenges. (This is often discussed under the concept of redundancy. Joyner (2013) emphasizes both the importance of redundancy in enabling organisms to regulate phenomena sufficiently to survive in the face of loss of particular capacities (e.g., to sufficiently regulate blood pressure without baroreflexes) and the challenges this presents to physiology since modifying a single component of the organism may not produce much effect when others can compensate.) Satinoff identifies other forms of damage, such as to the lateral hypothalamus in people, that impair operantly conditioned responses, but not autonomic responses. He also reports on research by Roberts and Mooney (1974) that demonstrated that warming different regions of the diencephalon and mesencephalon of rats produced different responses. Satinoff referred to his account as 'essentially Jacksonian' (Jackson (1884) advanced a view

© 2024 The Author(s). *The Journal of Physiology* published by John Wiley & Sons Ltd on behalf of The Physiological Society.

in which brain evolution added new regulatory brain regions that operated on those already operative; when the new brain region failed, the earlier evolved regions determined the outcome) because he viewed the various areas controlling temperature as arranged hierarchically, with higher areas exercising control over lower areas – when the higher control is removed, the lower areas are able to perform their control activities independently. On his view, what the hypothalamic controllers do is 'coordinate and adjust the activity of thermoregulatory systems located at several lower levels of the neuraxis.' Each of these employs its own setpoint and there is not one setpoint that temperature regulation is trying to maintain.

More recently, Kanosue et al. (1997) have echoed Satinoff's objection. They characterize the thermoregulatory system in the POA as involving multiple relatively independent circuits controlling different effectors that each affect temperature: 'the preoptic area is merely an assembly of neuronal groups sending efferent signals to each effector and … these neuronal groups work without connections with each other or with the posterior hypothalamus.' (For a similar argument, see McAllen et al., 2010.)

While these theorists propose multiple setpoints, other theorists advocate abandoning the setpoint concept altogether. Romanovsky (2004) argues for replacing it with the concept of a *balance point*: 'By eliminating the single set point (with all the underlying machinery), the balance point-based definitions draw attention to thermoeffector loops and passive elements of the system, i.e. to physiological and anatomic entities that exist and can be studied in direct experiments.' For example, he proposes investigating directly the loop controlling thermogenesis in the brown adipose tissue to understand responses to cold. The benefit, Romanovsky (2007) argues, is to redirect 'the scientific search from looking for the location of the set point (or building a new model of it) to studying the multiple feedback, feedforward, and open-loop components that contribute to thermal balance in the thermoregulatory system operating as a federation of independent thermoeffector loops.' For example, Romanovsky embraces Kobayashi et al.'s (2006) proposal that each temperature sensor acts as a thermostat: when its threshold is exceeded by a stimulus that is either too warm or too cold, it sends a signal to effector neurons (Similarly, the literature on the control of body weight also challenges the existence of setpoints and the use of this notion, replacing it with that of *settling point* (Müller et al., 2010).).

In subsequent work Romanovsky argues that there is no evidence in the POA for a mechanism that represents deviations of temperature from a setpoint. Rather, the neurons that integrate different signals from peripheral and central sensors are themselves the output neurons of the POA: 'Upstream of this neuron, there is no point where the cutaneous thermal signals ascending within the spinoreticulohypothalamic tract converge with brain temperature signals; downstream of this neuron, there is no POA' (Romanovsky, 2018, p. 22).

While accepting Romanovsky's argument for multiple, relatively independent mechanisms performing thermoregulation, Kanosue, Crawshaw, Nagashima, & Yoda (2010) reject his call to abandon reference to a setpoint. They argue that at a given time there is still one variable, T_{core}, that each of the regulators is seeking to maintain and fault Romanovsky's substitution of *balance point* for *setpoint* because it loses the critical idea that the organism is exercising control of this variable. They contend that any temperature at which the system stabilizes, such as a high temperature after exposure to heat and produced by an infection, would count as a balance point even if nothing were regulating it. Accordingly, they 'propose the usage of the word "regulated T_{core}"' to recognize that temperature is maintained through regulation. As is illustrated in Fig. 3, T_{core} does not need to be represented or maintained by a specific component. Each of the different individual control processes act to maintain this body temperature.

While the earlier challenges to homeostasis retained the notion of setpoint from the cyberneticists' account of homeostasis as negative feedback, this last challenge raises the question whether the setpoint should be regarded as a causally efficacious component or is even needed. On the accounts we have discussed, negative feedback retains a prominent but not exclusive role as theorists emphasize the plurality of mechanisms whose joint operation maintains the variables such as temperature in the range in which the components of the body can continue to function. A similar conclusion has been reached with respect to motor control and cardiovascular regulation during exercise, where the idea of an individual central command has been questioned and reframed as a network of different (feedforward and feedback) regulatory mechanisms (see Williamson 2010).

Maintaining the organism: reintegrating homeostasis and its competitors

In the previous section we introduced a variety of terms and concepts that researchers have advanced to supplement or replace homeostasis. All these theorists engaged the notion of a setpoint, arguing for viewing it as adjustable, settable in anticipation of future conditions, or as best done away with. During the same period, other researchers such as Carpenter (2004) have argued that Cannon's notion of homeostasis is capable of incorporating the divergent mechanisms and should be maintained as a unifying perspective. We concur that a return to Cannon's perspective provides a means to understand all of these processes as maintaining the

© 2024 The Author(s). *The Journal of Physiology* published by John Wiley & Sons Ltd on behalf of The Physiological Society.

viability of the organism, but contend that for homeostasis to provide such a unifying perspective, we need to understand the various restorative and anticipatory processes as all carried out at the behest of the organism and serving to maintain it.

It is easy to lose sight of the organism when one focuses on individual phenomena and investigates the mechanisms responsible for each of them. One of the main issues with the cybernetic approach was indeed the identification of physiological regulation with individual feedback mechanisms. This was done at the cost of neglecting organisms as the larger systems in which feedback loops play a functional role. The organism is the unit that is responsible for the production and maintenance of the mechanisms that constitute it. Zeroing in on specific phenomena and seeking responsible mechanisms is not unique to research on homeostasis. It has been and continues to be the approach of many investigators in biology and has been characterized in the accounts of the new mechanists in philosophy of science (Bechtel & Abrahamsen, 2005; Machamer et al., 2000). And it has been enormously successful. Many biological phenomena are carried out by what we will call *production mechanisms* – components that constrain free energy and use it to perform work – digest food, synthesize proteins, transport materials, repair broken components or recycle them, etc.

Having successfully characterized the mechanisms that carry out these activities, many biologists have turned their attention to how these are controlled. Control is essential: if production mechanisms constantly carried out the work they are designed to perform, they would exhaust available resources and do many things that are not conducive to the continued life of the organism. We characterize control as carried out by other mechanisms, ones that register conditions in the organism and its environment and act on production mechanisms, altering how they operate (Bich & Bechtel, 2022; Winning & Bechtel, 2018). Maintaining the viability of the internal environment or homeostasis requires control mechanisms to detect conditions that require a response and to activate appropriate production mechanisms.

As researchers have investigated control mechanisms, they have come to recognize not only that there are a tremendous number of them but also that they interact in complex ways. Sterling and Eyer (1988), in addition to arguing for allostasis as a replacement concept for homeostasis on the grounds that organisms change the value of variables they maintain in anticipation of changing conditions, advanced an additional argument based on the interconnectedness of the processes through which organisms respond to challenges. They drew special attention to the fact that as a result of these

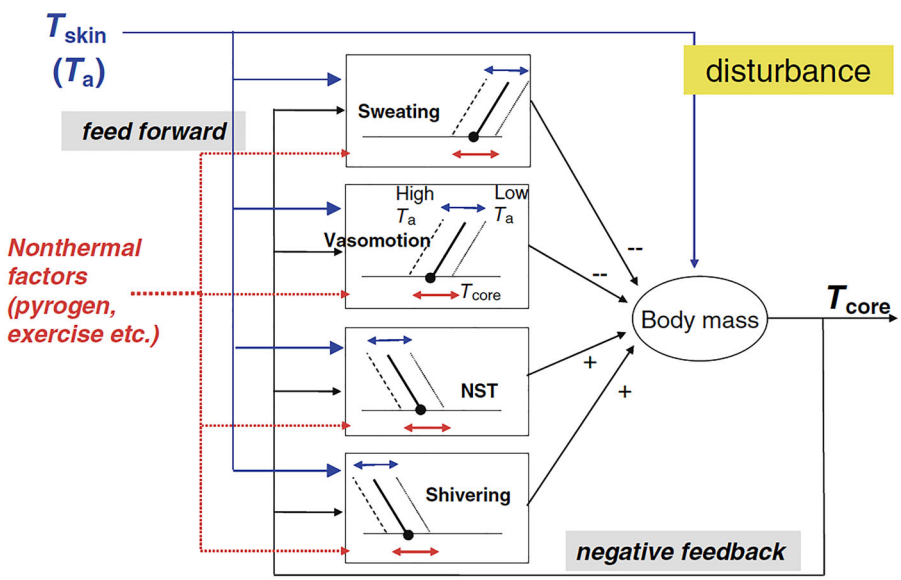

Figure 3. The multiplicity of feedback mechanisms involved in regulating T_{core}, some acting to reduce T_{core} (sweating and vasomotion) and others increasing it (non-shivering thermogenesis (NST) and shivering)

Each of these responses is modulated by feedforward processing of T_{skin} (which also acts directly to modify T_{core}) and by non-thermal factors such as pyrogens (indicative of bacterial infections). Both feedforward processing and responses to non-thermal factors act to alter the response of the various thermal effectors to deviations from the target T_{core} (indicated by the red and blue lines with two arrowheads). From Kanosue et al. (2010), Concepts to utilize in describing thermoregulation and neurophysiological evidence for how the system works, *European Journal of Applied Physiology* 109, 5–11 (Fig. 3), with permission from Springer. ©Springer.

© 2024 The Author(s). *The Journal of Physiology* published by John Wiley & Sons Ltd on behalf of The Physiological Society.

interconnections, as processes change one parameter in organisms, many other conditions are changed. For example, they describe how, as behavioural activity increases blood pressure, many other processes in the organism are changed:

> What other physiological parameters besides blood pressure covary with behavioural state? The answer is, essentially all of them. As blood pressure rises during arousal, there is a dramatic shift in the pattern of blood flow: more to muscle, less to the gut, kidney, and skin. Correspondingly, there is a metabolic mobilization to increase energy production. Glucose, amino acids, and fatty acids are released from their macromolecular storage forms (glycogen, protein, and fat) and their blood levels rise. Synthesis of the storage forms is halted. Red blood cells and oxidative enzymes in the liver increase because these facilitate the energy mobilization. Other processes that use energy but that do not contribute to the metabolic mobilization are suppressed: the immune response declines as circulating white blood cells decrease and the thymus shrinks. Wound healing, bone growth and repair, replacement of the cellular lining of the gut, etc. all slow markedly.

As a result, Sterling and Eyer argue that maintaining health requires focusing not on individual variables but the interconnected set of physiological processes: 'to maintain stability an organism must vary all the parameters of its internal milieu and match them appropriately to environmental demands' (Sterling & Eyer, 1988, p. 636). This passage immediately precedes the one in which they introduce the term allostasis: 'We refer to this principle as allostasis, meaning 'stability through change'.'

Yet another thread in Sterling and Eyer's argument for allostasis is the recognition of the pathologies that can result from responses that attempt to restore the organism when it is challenged. The potential for physiological responses to disturbances to result in pathology was recognized by Selye (1973), who offered three examples: cardiovascular accidents induced by neuroendocrines, anaphylaxis or allergies resulting from antibodies, and interference with inflammation and immunological responses to microorganisms. Sterling and Eyer cite the health effects on the generation born after World War II as economic expansion ceased: 'It experienced elevated mortality at ages 15–24 from accidents, homicide, and suicide, and at ages 30–34 from liver cirrhosis (due to alcoholism). This cohort is now reaching the age at which the important causes of death become renal, cerebral, and cardiovascular disease, causes for which hypertension is the largest single contributor' (pp. 629–30).' McEwen and Stellar (1993) introduced the term 'allostatic load' for these effects.

Sterling and Eyer's appeal to the organism as that which 'must vary all the parameters in its internal milieu' raises a question – what is an organism? This phrasing, which is entirely natural, suggests that the organism is one thing and the parameters it varies something else. But an organism is not something in addition to its various components and it does not carry out activities beyond those performed by its components. But neither is it epiphenomenal. The organism is, we contend, the very set of integrated processes, including control processes, that function to maintain the organism. What makes the set of mechanisms into an organism is that each of these components is made by components of the organism (Maturana & Varela, 1980), repaired by them when they fail (Rosen, 1991), and provided with the resources it needs by them. The components together constitute an organism because they are embedded in a network of cyclic causality or closure. The networked components render the organism autonomous (Moreno & Mossio, 2015) – an integrated system that directs its own activities. On this view, the focus of attention is not individual physiological variables *per se*, but their role in the network that constitutes the organism that maintains itself.

Adopting this view of the organism has at least three important implications. First, physiological regulation is not synonymous with stability and need not be designed to maintain particular values of variables. Regulatory activities take place in whole organisms. Organisms can radically modify their physiological regimes and the related variables in response to environmental change. The way they do so may depend on the stage of their daily, seasonal and life cycles. What is central is not the maintenance of the value of a variable (even though it might be useful to maintain it), but of the whole system. Second, the maintenance of variables within the range that facilitates the continuity of the organism does not need to be due to a single controller but instead can result from the coordinated operation of numerous controllers. Third, some variable might exhibit stability without being the target of regulation, but as a consequence of the activity of these numerous controllers. This view provides theoretical grounding for abandoning setpoints as reference values for physiological variables. One can recognize balance points or settling points – values to which physiological variables tend to converge – without treating them as entities with causal efficacy.

In a very insightful but relatively uncited paper (cited in several of Romanovsky's publications but having only 26 citations according to Web of Science, 30 according to Scopus, 129 according to Google Scholar), Partridge (1982) advances an instructive framework for thinking about the control processes of organisms. Focusing on control is central to understanding evolutionary change. The basic production mechanisms found in living organisms are highly conserved. Evolutionary change arises from changing regulatory processes so as to deploy production mechanisms in new ways (see Kirschner & Gerhart, 2005). Partridge subtitled the paper 'evolution

© 2024 The Author(s). *The Journal of Physiology* published by John Wiley & Sons Ltd on behalf of The Physiological Society.

is not engineering'. As he relates, an engineer begins by identifying a problem and tailoring a solution to it. Evolution works by introducing variations into existing organisms, some of which are maintained. Partridge characterizes maintenance as due to selection, but a variant could also be maintained as long as it does not seriously impair the survival of the organism. He argues that large variants are likely to cause serious disruptions; accordingly, small variants are more likely to survive. From our perspective, the result will appear as a piecemeal set of solutions to problems, although the variations were not introduced to solve problems – they just happened. It is scientists seeking to understand how organisms evolved that identify the problems that were solved. Moreover, in introducing variants, evolution does not respect principles of modular design but rather makes changes that can affect anything in the organism. Further, to be maintained, the changes only have to be 'good enough' for the organism to continue to function in its current environment. The main title of Partridge's paper is 'The good enough calculi of evolving control systems'. His point is that we should not expect to find what we might consider a rational design. Rather:

> Evolution would seem likely to result in a semi coordinated, multidimensional, nonhomeostatic controlling system with operators functioning on 'strange' coordinates and defined as much by their nonrules as by their rules while providing a piecewise control on both overdetermined and underdetermined subfunctions in a variety of partly overlapping and partly discontinuous regions where, using simple approximations, it computes statistically 'good enough' responses from incomplete or even 'inappropriate' data.'

As the term *nonhomeostatic* indicates, Partridge is critical of standard conceptions of homeostasis. He asserts: 'It would appear that any semblance of constancy of internal milieu or homeostasis or of a set point type of controller is either an artifact of tests used or an accident of evolutionary design, instead of showing a fundamental life property.' Instead of holding the value of any variable constant, he argues we should expect to find 'functionally adaptive modification of it over a limited range.'

Accepting Partridge's contention that evolution does not promote rational design, we focus on one feature that has been thought to be an important principle of rational design: that control processes be arranged hierarchically, with higher-level control mechanisms operating on lower-level ones, and a single controller at the top of the hierarchy. At successive levels, controllers control multiple lower-level elements, resulting in a pyramid structure. Engineered systems are typically designed so that humans can exercise control over them. Human companies as well as social and political organizations are set up in this manner – lower-level officers report to higher level offices, culminating in a chief executive that is responsible for the whole institution.

Hierarchical organization of control is widely assumed to be required for systems to achieve whatever ends they seek to achieve. Without it, it is assumed that the whole system would descend into chaos as different elements within it pursued different, and often conflicting, ends. In the spirit of Partridge, we argue that evolution has not arrived at such 'rational' arrangement of control. To begin with, we note that hierarchical control systems are highly fragile and challenging to maintain. They require enormous information processing by the top-level controller and are only as effective as that controller is at acquiring and processing information required to direct the other components of the system to operate in ways that collectively result in the maintenance of the system. Whereas human-designed products and institutions often fail in ways that lead to their demise, similar failure has not occurred in the lineages of every organism that is alive today. If it had, these organisms would not be here. Other related organisms have failed, and indeed all organisms do die, many without reproducing. Nonetheless, the world is populated by organisms that are the most recent individuals in continuous lineages from the first organism, each of which has survived at least to reproduction.

McCulloch (1945) introduced the term *heterarchy* for systems of preferences that violate hierarchical ordering such as the preferences in which A is preferred to B, B to C, and C to A. Pattee, who throughout most of his career adopted a hierarchical understanding of control in characterizing living systems (see, for example, Pattee, 1970), in a late publication adopted the term *heterarchy* for what he termed 'measurement control networks' (Pattee, 1991). *Heterarchy* is an apt term for the organization of control in living organisms. It stands for a rejection of all the central features of the pyramid structure of hierarchy – rather than fewer, there are often more controllers than controlled components, they are not organized in well-delineated levels (there can be cycles such as McCulloch identified between preferences), and there is no highest-level controller. As Pattee emphasized, controllers in biology often form networks in which individual controllers integrate signals from different controllers and send output to multiple controllers (sometimes receiving inputs from and sending outputs to the same other controller). Such heterarchy of control processes is what one might expect from evolution – different control components and connections between them are added over time. If the organism remains able to construct and maintain itself, the additions may be perpetuated in its descendants.

One consequence of heterarchy is the appearance of redundancy (Joyner, 2013). A misleading connotation of redundancy is that redundant components do the same

© 2024 The Author(s). *The Journal of Physiology* published by John Wiley & Sons Ltd on behalf of The Physiological Society.

thing. The evolution of a heterarchical network is not likely to result in strictly redundant components. Rather, it is likely to give rise to multiple components that perform different activities that overlap and are networked to work together. When one fails, those whose activities overlap may be upregulated so that the deficiency is mitigated. This type of organization might explain why it is difficult, if not impossible, to find compelling evidence for the locus of central command for the regulation of physiological variables or activities. What emerges is rather a distributed network of different types of controllers (Williamson, 2010, 2015). Such a network may not appear to us as rational (Partridge, 1982), but what mattered for it being established through evolution was that it sufficed to maintain the organism.

The result is that the whole network integrates the diverse sources of information about conditions relevant to the maintenance of the organism. While none of the individual control processes suffices to maintain the organism, the whole network can. Partridge develops this point: the multiple controllers operative in an organism 'would exhibit an informal type of coordination, although each could have been invented as an independent innovation with no prescribed plan for linkage.' A related insight is advanced by Imeri (2017) 'Maybe we do not need any top organizer (i.e., by definition, a supra-structure), when things "down there," in a process that took a few millions years, got organized by themselves so nicely.'

Our proposal is to understand homeostasis as the activity of organisms maintaining themselves. Organisms consist of production mechanisms and, crucially, a heterarchical network of control mechanisms. Individually, each control mechanism responds to conditions affecting the organism and performs control activities in response. Each, however, also interacts with other control mechanisms in a network assembled over evolutionary time. No one control mechanism is in charge: none has a comprehensive perspective on the organism and so none alone could maintain it. But together they can. As each carries out a control activity to maintain the viable functioning of parts of the organism, it changes the same organism to which others are attached. If the one change ramifies through the organism, and renders other components less able to operate, other control mechanisms will initiate their own responses. If the challenges to the system are too great, the responses of the various control mechanisms may not suffice, and the organism will die. This is most likely when the organism is thrust into a situation different from one in which its predecessors had evolved by acquiring small variations that together sufficed to sustain the organism in that environment. But each organism alive today is testimony to many predecessors that were able to respond to challenges and maintain themselves in a condition in which they could continue to carry out the activities of life.

Adopting this perspective on the organism, we can understand how it is able to regulate multiple processes that have the effect of maintaining conditions in the organism suitable for its continued existence. These may involve negative feedback, possibly with adjustable setpoints, or mechanisms that do not employ setpoints but nonetheless operate to keep the organism in a state in which its various components can operate. This perspective on organisms consisting of integrated networks of control allows us to embrace, with a couple of amendments, Billman's (2020) characterization of homeostasis as a concept capable of bringing together the diverse accounts we have discussed: 'Homeostasis is not static and unvarying; it is a dynamic process that can change internal conditions as required to survive external challenges. It is also important to note that homeostatic regulation is not merely the product of a single negative feedback cycle but reflects the complex interaction of multiple feedback [and other] systems that can [each] be modified by [other] control centers.'

Conclusion

In the previous sections we have traced a historical trajectory in which homeostasis came to be identified with negative feedback processes that maintain setpoints, prompting numerous critiques and proposals for replacement concepts. We view the criticisms of the narrow conception of homeostasis defended by the cyberneticists to be well founded. They do not, however, undercut the spirit of Bernard's account of some organisms maintaining the viability of their internal environment or Cannon's perspective in introducing the concept of homeostasis. The critics of the narrow conception of homeostasis have identified important processes that deviate from the framework negative feedback to a setpoint and that contribute to the ability of organisms to maintain themselves. Recognizing the collective of negative feedback and alternative control mechanisms, however, does not provide an integrated perspective for understanding organisms. That requires bringing the organism explicitly into focus as the entity that is maintaining the viable functioning of its component mechanisms. By recognizing the organism as constituted by the diverse range of control mechanisms that have evolved over evolutionary time through a process of small variations that have, among other things, integrated controllers with each other, we can return to the vision of Bernard and Cannon – that organisms, as integrated systems of production and control mechanisms act to maintain themselves in a condition in which these

© 2024 The Author(s). *The Journal of Physiology* published by John Wiley & Sons Ltd on behalf of The Physiological Society.

mechanisms can continue to perform the activities needed to remain alive.

References

Aschoff, J.(1964). *Survival value of diurnal rhythms*. Paper presented at the Symposia of the Zoological Society of London.

Aschoff, J.(1970). Circadian rhythm of activity and of body temperature. In J. D. Hardy, A. P. Gagge, & J. A. J. Stolwijk (Eds.), *Physiological and behavioral temperature regulation* (pp. 905–919). Charles C. Thomas.

Baedke, J.(2019). O organism, where art thou? Old and new challenges for organism-centered biology. *Journal of History of Biology*, **52**(2), 293–324.

Bechtel, W., & Abrahamsen, A.(2005). Explanation: A mechanist alternative. *Studies in History and Philosophy of Biological and Biomedical Sciences*, **36**(2), 421–441.

Bernard, C.(1859). *Leçons sur les propriétés physiologiques et les altérations pathologiques des liquides de l'organisme* (Vol., **1**). Baillière.

Bernard, C.(1878). *Leçons sur les phénomènes de la vie communs aux animaux et aux végétaux*. Baillière.

Bich, L., & Bechtel, W.(2022). Control mechanisms: Explaining the integration and versatility of biological organisms. *Adaptive Behavior*, **30**(5), 389–407.

Bich, L., & Damiano, L.(2008). Order in the nothing: Autopoiesis and the organizational characterization of the living. In I. Licata & A. Sakaji (Eds.), *Physics of emergence and organization* (pp. 343–373). World Scientific.

Billman, G. E. (2020). Homeostasis: The underappreciated and far too often ignored central organizing principle of physiology. *Frontiers in Physiology*, **11**, 200.

Block, B. A.(1994). Thermogenesis in muscle. *Annual Review of Physiology*, **56**(1), 535–577.

Boulant, J. A.(2006). Neuronal basis of Hammel's model for set-point thermoregulation. *Journal of Applied Physiology*, **100**(4), 1347–1354.

Cannon, W. B.(1929). Organization for physiological homeostasis. *Physiological Reviews*, **9**(3), 399–431.

Cannon, W. B. (1926). Physiological regulation of normal states: some tentative postulates concerning biological homeostatics. In A. Pettit (Ed.), *A Charles Richet: ses amis, ses collègues, ses élèves* (pp. 91–93). Paris: Les Éditions Médicales.

Carpenter, R. H. S.(2004). Homeostasis: A plea for a unified approach. *Advances in Physiology Education*, **28**(4), 180–187.

Commission for Thermal Physiology of the International Union of Physiological Sciences (2001). Glossary of terms for thermal physiology (Third Edition). *Japanese Journal of Physiology*, **51**, 245–280.

Cornish-Bowden, A.(2006). Putting the systems back into systems biology. *Perspectives in Biology and Medicine*, **49**(4), 475–489.

Delpire, E., & Gagnon, K. B.(2018). Chapter one – Water homeostasis and cell volume maintenance and regulation. In I. Levitane, E. Delpire, & H. Rasgado-Flores (Eds.), *Current topics in membranes* (Vol., **81**, pp. 3–52): Academic Press.

Gilbert, S. F., & Sarkar, S.(2000). Embracing complexity: Organicism for the 21st century. *Developmental Dynamics*, **219**(1), 1–9.

Guyton, A. C.(1982). *Human physiology and mechanisms of disease* (3rd ed.). Saunders.

Hagen, J. B.(2021). *Life out of balance: Homeostasis and adaptation in a Darwinian world*. The University of Alabama Press.

Halberg, F.(1953). Some physiological and clinical aspects of 24-hour periodicity. *The Lancet*, **73**(1), 20–32.

Hammel, H. T.(1965). Neurons and temperature regulation. In W. Yamamoto & J. Brobeck (Eds.), *Physiological controls and regulations*. Saunders.

Hammel, H. T.(1990). Negative plus positive feedback. In J. Bligh, K. Voigt, H. A. Braun, K. Brück, & G. Heldmaier (Eds.), *Thermoreception and temperature regulation* (pp. 174–182). Springer.

Hammel, H. T., Jackson, D. C., Stolwijk, J. A., Hardy, J. D., & Stromme, S. B.(1963). Temperature regulation by hypothalamic proportional control with an adjustable set point. *Journal of Applied Physiology*, **18**(6), 1146–1154.

Craig Heller, H., Colliver, G. W., & Beard, J.(1977). Thermoregulation during entrance into hibernation. *Pflügers Archiv*, **369**(1), 55–59.

Holmes, F. L.(1986). Claude Bernard, The "Milieu Intérieur", and regulatory physiology. *History and Philosophy of the Life Sciences*, **8**(1), 3–25.

Imeri, L.(2017). Thermoregulation as a non-unified system: A difficult to teach concept. *Temperature*, **4**(1), 1–8.

Jackson, J. H.(1884). Evolution and dissolution of the nervous system (The Croonian Lectures). *The Lancet*, **123**, 555–558, 649–652, 739–744.

Jonas, H.(1953). A critique of cybernetics. *Social Research*, **20**(2), 172–192.

Joyner, M. J.(2013). Physiology and redundancy. *Physiology*, **28**(3), 136–137.

Kanosue, K., Crawshaw, L. I., Nagashima, K., & Yoda, T.(2010). Concepts to utilize in describing thermoregulation and neurophysiological evidence for how the system works. *European Journal of Applied Physiology*, **109**(1), 5–11.

Kanosue, K., Romanovsky, A. A., Hosono, T., Chen, X.-M., & Yoda, T.(1997). "Set point" revisited. In J. B. Nielsen & R. Nielsen (Eds.), *Thermal physiology 1997* (pp. 39–43). The August Krogh Institute.

Kirschner, M., & Gerhart, J.(2005). *The plausibility of life: Resolving Darwin's dilemma*. Yale University Press.

Kobayashi, S., Okazawa, M., Hori, A., Matsumura, K., & Hosokawa, H.(2006). Paradigm shift in sensory system—Animals do not have sensors. *Journal of Thermal Biology*, **31**(1–2), 19–23.

Langley, L. L.(1965). *Homeostasis*. Reinhold.

Machamer, P., Darden, L., & Craver, C. F.(2000). Thinking about mechanisms. *Philosophy of Science*, **67**(1), 1–25.

Magoun, H. W., Harrison, F., Brobeck, J. R., & Ranson, S. W.(1938). Activation of heat loss mechanisms by local heating of the brain. *Journal of Neurophysiology*, **1**(2), 101–114.

Maturana, H. R., & Varela, F. J.(1980). Autopoiesis: The organization of the living. In H. R. Maturana & F. J. Varela (Eds.), *Autopoiesis and cognition: The realization of the living* (pp. 73–138). Reidel.

© 2024 The Author(s). *The Journal of Physiology* published by John Wiley & Sons Ltd on behalf of The Physiological Society.

Mayr, O.(1970). *The origins of feedback control*. MIT Press.
McAllen, R. M., Tanaka, M., Ootsuka, Y., & McKinley, M. J.(2010). Multiple thermoregulatory effectors with independent central controls. *European Journal of Applied Physiology*, **109**(1), 27–33.
McCulloch, W. S.(1945). A heterarchy of values determined by the topology of nervous nets. *The Bulletin of Mathematical Biophysics*, **7**(2), 89–93.
Mcewen, B. S.(1993). Stress and the individual. Mechanisms leading to disease. *Archives of Internal Medicine*, **153**(18), 2093–2101.
Moore-Ede, M. C.(1986). Physiology of the circadian timing system: Predictive versus reactive homeostasis. *American Journal of Physiology*, **250**(5 Pt 2), R737–752.
Moreno, A., & Mossio, M.(2015). *Biological autonomy: A philosophical and theoretical inquiry*. Springer.
Mossio, M., & Bich, L.(2017). What makes biological organisation teleological? *Synthese*, **194**(4), 1089–1114.
Mrosovsky, N.(1971). *Hibernation and the hypothalamus*. Appleton-Century-Crofts.
Mrosovsky, N.(1990). *Rheostasis: The physiology of change*: Oxford University Press.
Müller, M. J., Bosy-Westphal, A., & Heymsfield, S. B.(2010). Is there evidence for a set point that regulates human body weight? *F1000 Medical Report*, **2**, 59.
Nagashima, K., Nakai, S., Tanaka, M., & Kanosue, K.(2000). Neuronal circuitries involved in thermoregulation. *Autonomic Neuroscience: Basic and Clinical*, **85**(1–3), 18–25.
Nakamura, K.(2015). Neural circuit for psychological stress-induced hyperthermia. *Temperature*, **2**(3), 352–361.
Nicholson, D. J.(2014). The return of the organism as a fundamental explanatory concept in biology. *Philosophy Compass*, **9**(5), 347–359.
Nicolaïdis, S.(1977). Physiologie du comportement alimentaire. In P. Meyer (Ed.), *Physiologie humaine*. Flammarion Médecine-Sciences.
Oka, T., & Oka, K.(2012). Mechanisms of psychogenic fever. *Advances in Neuroimmune Biology*, **3**(1), 3–17.
Parati, G., Torlasco, C., Pengo, M., Bilo, G., & Ochoa, J. E.(2020). Blood pressure variability: Its relevance for cardiovascular homeostasis and cardiovascular diseases. *Hypertension Research*, **43**(7), 609–620.
Partridge, L. D.(1982). The good enough calculi of evolving control systems: Evolution is not engineering. *American Journal of Physiology-Regulatory, Integrative and Comparative Physiology*, **242**(3), R173–R177.
Pattee, H. H.(1970). The problem of biological hierarchy. In C. H. Waddington (Ed.), *Towards a theoretical biology 3: Drafts* (pp. 117–136). Edinburgh University Press.
Pattee, H. H.(1991). Measurement-control heterarchical networks in living systems. *International Journal of General Systems*, **18**(3), 213–221.
Pias, C., & Von Foerster, H.(2016). *Cybernetics: The Macy conferences 1946–1953*. Diaphanes.
Ramsay, D. S., & Woods, S. C.(2014). Clarifying the roles of homeostasis and allostasis in physiological regulation. *Psychological Review*, **121**(2), 225–247.
Ramsay, D. S., & Woods, S. C.(2016). Physiological regulation: How it really works. *Cell Metabolism*, **24**(3), 361–364.
Rattan, S. I. S.(2007). Homeostasis, homeodynamics, and aging. In J. E. Birren (Ed.), *Encyclopedia of gerentology* (pp. 696–700). Academic Press.
Refinetti, R.(2010). The circadian rhythm of body temperature. *Frontiers in Bioscience-Landmark*, **15**(2), 564–594.
Roberts, W. W., & Mooney, R. D.(1974). Brain areas controlling thermoregulatory grooming, prone extension, locomotion, and tail vasodilation in rats. *Journal of Comparative and Physiological Psychology*, **86**(3), 470–480.
Robin, C. P.(1853). *Traité de chimie anatomique et physiologique normale et pathologique, ou, Des principes immédiats normaux et morbides*. J.-B. Baillière.
Röder, P. V., Wu, B., Liu, Y., & Han, W.(2016). Pancreatic regulation of glucose homeostasis. *Experimental and Molecular Medicine*, **48**(3), e219.
Romanovsky, A. A.(2004). Do fever and anapyrexia exist? Analysis of set point-based definitions. *American Journal of Physiology-Regulatory, Integrative and Comparative Physiology*, **287**(4), R992–R995.
Romanovsky, A. A.(2007). Thermoregulation: some concepts have changed. Functional architecture of the thermoregulatory system. *American Journal of Physiology-Regulatory, Integrative and Comparative Physiology*, **292**(1), R37–R46.
Romanovsky, A. A.(2018). The thermoregulation system and how it works. In A. A. Romanovsky (Ed.), *Handbook of Clinical Neurology* (Vol., **156**, pp. 3–43): Elsevier.
Rosen, R.(1991). *Life itself: A comprehensive inquiry into the nature, origin, and fabrication of life*. Columbia University Press.
Rosenblueth, A., Wiener, N., & Bigelow, J.(1943). Behavior, purpose, and teleology. *Philosophy of Science*, **10**(1), 18–24.
Sachs, C.(2023). Naturalized teleology: Cybernetics, organization, purpose. *Topoi*, **42**(3), 781–791.
Satinoff, E.(1978). Neural organization and evolution of thermal regulation in mammals. *Science*, **201**(4350), 16–22.
Schmidt-Nielsen, K., Schmidt-Nielsen, B., Jarnum, S. A., & Houpt, T. R.(1957). Body temperature of the camel and its relation to water economy. *American Journal of Physiology*, **188**(1), 103–112.
Schulkin, J., & Sterling, P.(2019). Allostasis: A brain-centered, predictive mode of physiological regulation. *Trends in Neurosciences*, **42**(10), 740–752.
Selye, H.(1973). Homeostasis and heterostasis. *Perspectives in Biology and Medicine*, **16**(3), 441–445.
Selye, H.(1975). Homeostasis and the reactions to stress: A discussion of Walter B. Cannon's contributions. In C. M. Brooks, K. Kozumi, & J. O. Pinkerten (Eds.), *The life and contributions of W. B. Cannon 1871–1945* (pp. 89–107). State University of New York, Downstate Medical Center.
Sterling, P.(2004). Principles of allostasis: Optimal design, predictive regulation, pathophysiology, and rational therapeutics. In J. Schulkin (Ed.), *Allostasis, homeostasis, and the costs of physiological adaptation* (pp. 17–64). Cambridge University Press.
Sterling, P., & Eyer, J.(1988). Allostasis: A new paradigm to explain arousal pathology. *Handbook of of Life Stress, Cognition and Health*.

© 2024 The Author(s). *The Journal of Physiology* published by John Wiley & Sons Ltd on behalf of The Physiological Society.

Tan, C. L., & Knight, Z. A.(2018). Regulation of body temperature by the nervous system. *Neuron*, **98**(1), 31–48.
Ursini, F., Maiorino, M., & Forman, H. J.(2016). Redox homeostasis: The golden mean of healthy living. *Redox Biology*, **8**, 205–215.
Waddington, C. H.(1957). *The strategy of the genes; a discussion of some aspects of theoretical biology*. Allen & Unwin.
Wiener, N.(1948). *Cybernetics: Or, control and communication in the animal and the machine*. Wiley.
Williamson, J. W.(2010). The relevance of central command for the neural cardiovascular control of exercise. *Experimental Physiology*, **95**(11), 1043–1048.
Williamson, J. W.(2015). Autonomic responses to exercise: Where is central command? *Autonomic Neuroscience – Basic & Clinical*, **188**, 3–4.
Winning, J., & Bechtel, W.(2018). Rethinking causality in neural mechanisms: Constraints and control. *Minds and Machines*, **28**(2), 287–310.
Wunderlich, K. R. A.(1868). *Das verhalten der eigenwärme in krankheiten*. Otto Wigard.
Yates, F. E.(1994). Order and complexity in dynamical systems: Homeodynamics as a generalized mechanics for biology. *Mathematical and Computer Modelling*, **19**(6–8), 49–74.
Yates, F. E. (1996). Homeostasis. In J. Birren (Ed.), *Encyclopedia of Gerontology*. New York: Academic.

Additional information

Competing interests

The authors have no conflicts of interest.

Author contributions

W.B. and L.B.: conception or design of the work; acquisition, analysis or interpretation of data for the work; drafting the work or revising it critically for important intellectual content. Both authors have read and approved the final version of this manuscript and agree to be accountable for all aspects of the work in ensuring that questions related to the accuracy or integrity of any part of the work are appropriately investigated and resolved. All persons designated as authors qualify for authorship, and all those who qualify for authorship are listed.

Funding

L.B. was supported by grant Ramón y Cajal RYC-2016-19 798 funded by MCIN/AEI/10.13039/501 100 011 033 and by ESF 'Investing in your future'; by grant PID2019-104576GB-I00 for project Outonomy funded by MCIN/AEI/10.13039/501 100 011 033; by grant IT1668-22 funded by the Basque Government. L.B. also acknowledges support by the John Templeton Foundation (#62 220). The opinions expressed in this paper are those of the authors and not those of the John Templeton Foundation.

Keywords

control, feedback, homeostasis, organism, setpoint

Supporting information

Additional supporting information can be found online in the Supporting Information section at the end of the HTML view of the article. Supporting information files available:

Peer Review History

© 2024 The Author(s). *The Journal of Physiology* published by John Wiley & Sons Ltd on behalf of The Physiological Society.