NSS

University of New Mexico

Uniform Single Valued Neutrosophic Graphs

S. Broumi[1], A. Dey[2], A. Bakali[3], M. Talea[1], F. Smarandache[4]
L. H. Son[5], D. Koley[6]

[1] Laboratory of Information Processing, Faculty of Science Ben M'Sik, University Hassan II, B.P 7955, Sidi Othman, Casablanca, Morocco. E-mail: broumisaid78@gmail.com
[2]Saroj Mohan Institute of Technology, West Bengal, India, E-mail:arindam84nit@gmail.com
[3] Ecole Royale Navale, Casablanca, Morocco, e-mail: assiabakali@yahoo.fr
[4] Department of Mathematics, University of New Mexico,705 Gurley Avenue, Gallup, NM 87301, USA, E-mail: fsmarandache@gmail.com
[5]Vietnam National University, Hanoi, Vietnam, E-mail: sonlh@vnu.edu.vn
[6]Techno India Hooghly Campus, West Bengal, India, E-mail:dipakkoley973@gmail.com

Abstract. In this paper, we propose a new concept named the uniform single valued neutrosophic graph. An illustrative example and some properties are examined. Next, we develop an algorithmic approach for computing the complement of the single valued neutrosophic graph. A numerical example is demonstrated for computing the complement of single valued neutrosophic graphs and uniform single valued neutrosophic graph.

Keywords: Single valued neutrosophic sets; Uniform single valued neutrosophic graph; Complement operators

1 Introduction

In 1965, Zadeh [7] originally introduced the concept of fuzzy set(FSs) which is characterized by a membership degree in [0, 1] for each element in the dataset. It may not always be true that the degree of non-membership of an element in a fuzzy set is equal to 1 minus the truth- membership degree because there is some kind of hesitation degree. On the basis of fuzzy sets, Atanassov [4] added a non-membership in the definition of intuitionistic fuzzy sets (IFSs) and later Smarandache [2] introduced the neutrosophic sets (NSs) with the appearance of the truth-membership degree (T), the falsehood-membership degree (F), and the indeterminacy degree (I). Wang et al. [3] proposed various set theoretical operators and linked to single valued neutrosophic sets The concept of neutrosophic sets have been successfully applied to many fields [16].

Fuzzy graph has been studied extensively in the past years [5,8,9]. Later on, Smarandache [1] proposed neutrosophic graphs in some special types such as neutrosophic offgraph, neutrosophic bipolar/tripolar/ multipolar graph. Presently, works on neutrosophic vertex-edge graphs and neutrosophic edge graphs are progressing rapidly. Broumi et al.[13] introduced certain types of single valued neutrosophic graphs (in short SVNG) such as strong single valued neutrosophic graph, constant single valued neutrosophic graph, complete single valued neutrosophic graph with their properties and examples. Neighborhood degree of a vertex and closed neighborhood degree of vertex in single valued neutrosophic graph were introduced in [15]. The necessary and sufficient condition for a single valued neutrosophic graph to be an isolated single valued neutrosophic graph has been presented in [10]. Other extensions of the neutrosophic graph have been described in [11,12, 14].

Up to now, to the best of our knowledge, there has been no study on the uniform single valued neutrosophic graph. Thus, we propose in this paper a new concept named the uniform single valued neutrosophic graph. An illustrative example and some properties are examined. Next, we develop an algorithmic approach for computing the complement of the single valued neutrosophic graph.

The remainder of this paper is organized as follows. In Section 2, we present the basic definitions. In section 3, we introduce the concept of uniform single valued neutrosophic graph and investigate its properties. Section 4 introduces an algorithm for computing the complement of single valued neutrosophic graphs. A numerical example is presented in Section 5. Finally, Section 6 outlines the conclusion of this paper and suggests several directions for future research.

2 Preliminaries

In this section, we have present the basic definitions of fuzzy sets, neutrosophic sets, single valued neutrosophic sets, fuzzy graphs, uniform fuzzy graphs, complement of single valued neutrosophic graph which will be useful to our main work in the next sections.

Definition 1[1]**.** Let X be the universe of discourse and its elements denoted by x. In fuzzy theory, a fuzzy set

A of universe X is defined by the function $T_A(x)$, called the membership function of set A.

$$T_A: X \rightarrow [0, 1] \qquad (1)$$

For any element x of universe X, $T_A(x)$ equals the degree, between 0 and 1, to which x is an element of set A, This degree represents the membership value or degree of membership of element x in set A.

Definition 2[1]**.** Let X be a space of points and let x ∈ X. A **neutrosophic set** A in X is characterized by a truth membership function T, an indeterminacy membership function I, and a falsehood membership function F which are real standard or nonstandard subsets of]−0,1+[, and T, I, F: X→]−0,1+[. The neutrosophic set can be represented as,

$$A=\{(x, T_A(x), I_A(x), F_A(x)): x \in X\} \qquad (4)$$

There is no restriction on the sum of T, I, F, So

$$^{-}0 \leq T_A(x)+ I_A(x)+F_A(x) \leq 3^{+}. \qquad (5)$$

From philosophical point of view, the neutrosophic set takes the value from real standard or non-standard subsets of $]^{-}0,1^{+}[$. Thus it is necessary to take the interval [0,1] instead of $]^{-}0,1^{+}[$. For practical applications, it is difficult to apply$]^{-}0,1^{+}[$ in the real life applications such as engineering and scientific problems.

Definition 3[3]**.** Let X be a space of objects with generic elements in X denoted by x. A single valued neutrosophic set A (SVNS) is characterized by truth-membership function $T_A(x)$, an indeterminate-membership function $I_A(x)$, and a falsehood-membership function $F_A(x)$. For each point x in X, $T_A(x), I_A(x), F_A(x) \in [0, 1]$. A SVNS A can be written as,

$$A=\{(x, T_A(x), I_A(x), F_A(x)): x \in X\} \quad (6)$$

Definition 4 [5]**.** ***A fuzzy graph*** is a pair of functions G = (σ, μ) where σ is a fuzzy subset of a non empty set V and μ is a symmetric fuzzy relation on σ. i.e σ : V → [0,1] and μ: VxV→[0,1] such that μ(uv) ≤ σ(u) ∧ σ(v) for all u, v ∈ V where uv denotes the edge between u and v and σ(u) ∧ σ(v) denotes the minimum of σ(u) and σ(v). σ is called the fuzzy vertex set of V and μ is called the fuzzy edge set of E.

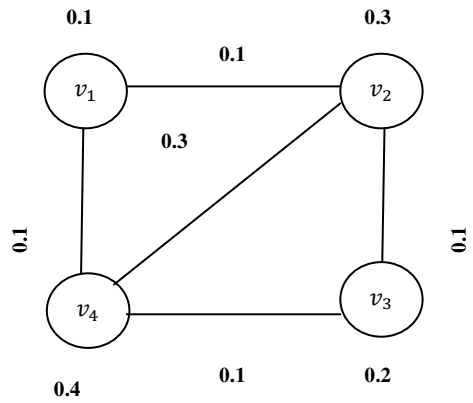

Fig.1. Fuzzy graph

Remark: The crisp graph G^* = (V, E) is a special case of the fuzzy graph G with each vertex and edge of (V, E) having degree of membership 1 (Fig. 1).

Definition5[6,8]**.** The complement of a fuzzy graph G = (σ, μ) is a fuzzy graph $\bar{G}$ = ($\bar{\sigma}$, $\bar{\mu}$) where $\bar{\sigma}$ =σ and $\bar{\mu}$(u,v) = σ(u)∧σ(v)-μ(u,v), ∀ u,v ∈ V.

Definition 6[6,8]. Let G = (σ, μ) be a fuzzy graph on a crisp graph G^* = (V, E). Let $\sigma^*=\{x\in V \mid \sigma(x)> 0\}$.Then G is called a uniform fuzzy graph of level $k$if μ (x,y) = k, ∀ (x,y) ∈ ($\sigma^* \times \sigma^*$) and $\sigma(x) = k$ where $k$isa positive real such that $0 < k_1 \leq 1$**.**

Definition 7[15].Let G = (V, E) be a single valued neutrosophic graph, then the **degree of a vertex**x_i is defined by $d_G(x_i)=d_G(x)=(d_T(x), d_I(x), d_F(x))$, $d_G(x_i) = (\sum_{x\neq y} T_B(x,y), \sum_{x\neq y} I_B(x,y), \sum_{x\neq y} I_B(x,y))$.

Definition 8[15].Let G = (V, E) be a single valued neutrosophic graph, then the **total degree of a vertex** x_i is defined by $td_G(x_i) = d_G(x) =(td_T(x), td_I(x), td_F(x))$, $td_G(x_i) = (\sum_{x\neq y} T_B(x,y) + T_A(x), \sum_{x\neq y} I_B(x,y) + I_A(x), \sum_{x\neq y} I_B(x,y) + F_A(x))$.

Definition 9[13]. Let G = (V, E) be a single valued neutrosophic graph, then the complement of single valued neutrosophic graph is defined as

1. $\bar{V}$ =V
2. $\bar{T}_A$ (x)=T_A(x), $\bar{I}_A(x) = I_A(x)$, $\overline{F_A}$(x) =F_A(x) for all x∈V.
3. $\overline{T_B}(x,y)= \min [T_A(x), T(y)] - T_B(x,y)$
$\overline{I_B}(x, y)= \max [I_A(x), I_A(y)] - I_B(x,y)$and
$\overline{F_B}(x,y)= \max [F_A(x), F_A(y)] - F_B(x,y)$, for all (x,y) ∈ E

Definition 10[13]. Let G = (V, E) be a single valued neutrosophic graph. If $d_G(x_i)= (k_1, k_2, k_3)$ for all x_i ∈ V, then the single valued neutrosophic graph is called regular SVNG of degree (k_1, k_2, k_3)

Definition 11[13]. Let G = (V, E) be a single valued neutrosophic graph. If $td_G(x_i)$= (k_1, k_2, k_3) for all $x_i \in$ V, then the single valued neutrosophic graph is called Totally regular SVNG of degree (k_1, k_2, k_3)

III. Uniform Single Valued Neutrosophic Graph

In this section, we define the concept of uniform single valued neutrosophic graphs(in short USVNGs).

Definition 8. Let G = (A, B) be a single valued neutrosophic graph where A =(T_A, I_A, F_A) is a single valued neutrosophic vertex of G and B is a single valued neutrosophic edge set of G. Let A={x∈ V | $T_A(x)$> 0,$I_A(x)$> 0 and $F_A(x) > 0$}.Then G is called Uniform single valued neutrosophic graph of level (k_1, k_2, k_3) if T_B (x,y) = k_1,$I_A(x)$=$k_2$and F_B(x,y) = k_3∀ (x,y) ∈ (V× V) and $T_A(x)$ = k_1,$I_A(x)$ = $k_2$and $F_A(x) = k_3$ where k_1, $k_2$and k_3 are some positive real such that 0 <k_1, k_2, k_3 ≤1.

Example 1. Consider an USVNG G= (A,B) on V={v_1,v_1,v_3,v_4} as shown in Fig.2.

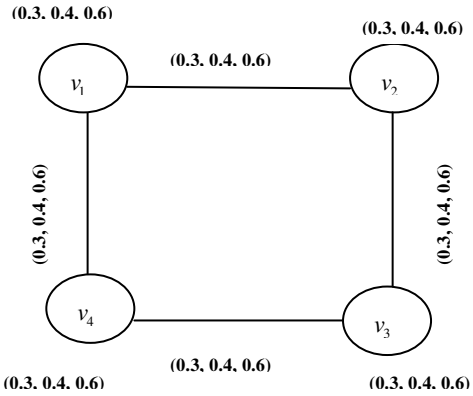

Fig. 2. USVNG.

Remark: The complement of an uniform single valued neutrosophic graph is always an empty graph.

Theorem1. If G = (A, B) is an uniform single valued neutrosophic graph of level (k_1, k_2, k_3) then G is a regular-USVNG.

Proof. Let A={x ∈ V | $T_A(x) >$ 0, $I_A(x) >$ 0 and $F_A(x) > 0$}. Suppose that G is a uniform single valued neutrosophic graph. Then T_B (x, y) = k_1,I_B (x, y) = k_2 and F_B(x,y) = k_3∀ (x,y) ∈ Eand $T_A(z) = k_1$, $I_A(z) = k_2$ and $F_A(z) = k_3$∀ z ∈ V for some real k_1, $k_2$and k_3 where 0 <k_1, k_2, k_3 ≤1.

Let x ∈ V. Now $d_G(x)$=($d_T(x)$,$d_I(x)$, $d_F(x)$)

$$d_G(x) = (\sum_{x\neq y} T_B(x,y), \sum_{x\neq y} I_B(x,y), \sum_{x\neq y} F_B(x,y))$$

=($\sum_{x\neq y} k_1$,$\sum_{x\neq y} k_2$,$\sum_{x\neq y} k_3$)

=((n-1) k_1, (n-1) k_2, (n-1) k_3)

$d_G(x)$=((n-1) k_1, (n-1) k_2, (n-1) k_3) ∀ x ∈ V

Therefore, G is regular uniform single valued neutrosophic graph.

Theorem 2. If G = (A, B) is a uniform single valued neutrosophic graph of level (k_1, k_2, k_3) then G is a totally regular- USVNG.

Proof. Let A={x ∈ V | $T_A(x) >$ 0, $I_A(x) >$ 0 and $F_A(x) > 0$}. Suppose that G is a uniform single valued neutrosophic graph. Then T_B (x, y) = k_1 ,I_B (x, y) = k_2 and F_B(x,y) = k_3∀ (x,y) ∈ Eand $T_A(z) = k_1$, $I_A(z) = k_2$ and $F_A(z) = k_3$∀ z ∈ V for some real k_1, k_2 and k_3 where 0 <k_1, k_2, k_3 ≤1.Let x ∈ V. Now,

$td_G(x)$=($d_T(x) + T_A(x)$,$d_I(x) + I_A(x)$,$d_F(x) + F_A(x)$)

$$td_G(x) = (\sum_{x\neq y} T_B(x,y) + T_A(x), \sum_{x\neq y} I_B(x,y) + I_A(x), \sum_{x\neq y} F_B(x,y) + F_A(x))$$

=(($\sum_{x\neq y} k_1$) + k_1, ($\sum_{x\neq y} k_2$) + k_2, ($\sum_{x\neq y} k_3$) + k_3)

=((n-1) k_1+k_1, (n-1) k_2+k_2, (n-1) k_3+k_3)

$td_G(x)$=(nk_1, n k_2, n k_3) ∀ x ∈ V.

Therefore, G is totally-regular uniform single valued neutrosophic graph.

Theorem 3. If G = (A, B) is a uniform single valued neutrosophic graph of level (k_1, k_2, k_3) on G^*=(V, E), then the order of G is O(G)= (nk_1, nk_2,nk_3).

Proof: Let A={x ∈ V | $T_A(x) >$ 0, $I_A(x) >$ 0 and $F_A(x) > 0$}. Suppose that G is a uniform single valued neutrosophic graph. Then T_B (x, y) = k_1 ,I_B (x, y) = k_2 and F_B(x,y) = k_3∀ (x,y) ∈ Eand $T_A(z) = k_1$, $I_A(z) = k_2$ and $F_A(z) = k_3$∀ z ∈ V for some real k_1, k_2 and k_3 where 0 < k_1, k_2, k_3 ≤1.Let x ∈ V. Now

$O(G)$=($O_T(G)$,$O_I(G)$,$O_F(G)$)

$$O(G) = (\sum_{x\in V} T_A(x), \sum_{x\in V} I_A(x), \sum_{x\in V} f_A(x))$$

=($\sum_{x\in V} k_1$,$\sum_{x\in V} k_2$, $\sum_{x\in V} k_3$)

Then,$O(G)$=(nk_1, n k_2, n k_3).

=($\sum_{x\in V} k_1$,$\sum_{x\in V} k_2$, $\sum_{x\in V} k_3$)

Then,$O(G)$=(nk_1, n k_2, n k_3).

Theorem 4. The uniform single valued neutrosophic graph is a generalization of uniform fuzzy graph.

Proof: Straightforward.

IV. Computing Complement of Single Valued Neutrosophic Graph

In this section, we present in the last paper, a peudo-code of an algorithm computing the complement of single valued neutrosophic graph. This algorithm has the ability of computing the complement of fuzzy graphs, strong intuitionistic fuzzy graphs, uniform fuzzy graphs and also uniform single valued neutrosophic graphs.

The following flowchart demonstrates the algorithm to compute the complement operator is presented in Fig.3V.Numerical Example

In this section, we present an example to compute the complements of the uniform single valued neutrosophic graph. Consider a graph in Fig.4.

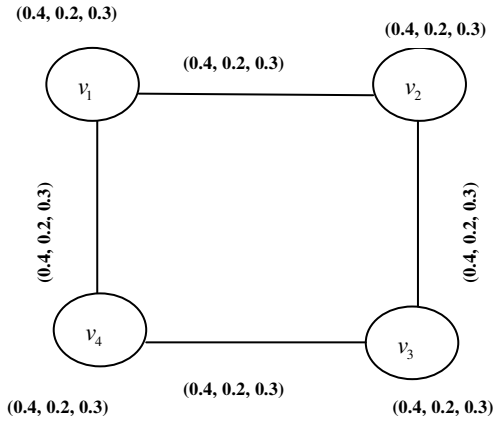

Fig. 4.A uniform single valued neutrosophic graph

Using the above pseudo code, the output result for the complement of a uniform single valued neutrosophic graph is in Fig. 5.

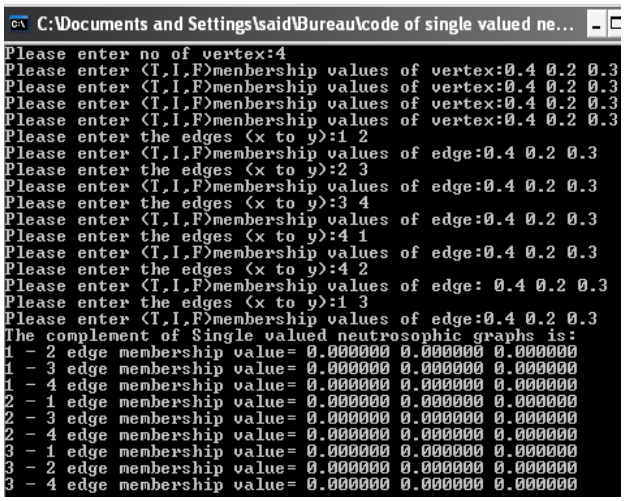

```
C:\Documents and Settings\said\Bureau\code of single valued ne...
Please enter no of vertex:4
Please enter (T,I,F)menbership values of vertex:0.4 0.2 0.3
Please enter (T,I,F)menbership values of vertex:0.4 0.2 0.3
Please enter (T,I,F)menbership values of vertex:0.4 0.2 0.3
Please enter (T,I,F)menbership values of vertex:0.4 0.2 0.3
Please enter the edges (x to y):1 2
Please enter (T,I,F)membership values of edge:0.4 0.2 0.3
Please enter the edges (x to y):2 3
Please enter (T,I,F)membership values of edge:0.4 0.2 0.3
Please enter the edges (x to y):3 4
Please enter (T,I,F)membership values of edge:0.4 0.2 0.3
Please enter the edges (x to y):4 1
Please enter (T,I,F)membership values of edge:0.4 0.2 0.3
Please enter the edges (x to y):4 2
Please enter (T,I,F)membership values of edge: 0.4 0.2 0.3
Please enter the edges (x to y):1 3
Please enter (T,I,F)membership values of edge:0.4 0.2 0.3
The complement of Single valued neutrosophic graphs is:
1 - 2 edge membership value= 0.000000 0.000000 0.000000
1 - 3 edge membership value= 0.000000 0.000000 0.000000
1 - 4 edge membership value= 0.000000 0.000000 0.000000
2 - 1 edge membership value= 0.000000 0.000000 0.000000
2 - 3 edge membership value= 0.000000 0.000000 0.000000
2 - 4 edge membership value= 0.000000 0.000000 0.000000
3 - 1 edge membership value= 0.000000 0.000000 0.000000
3 - 2 edge membership value= 0.000000 0.000000 0.000000
3 - 4 edge membership value= 0.000000 0.000000 0.000000
```

Fig. 5. The outputs

Example 2 Consider a fuzzy graph as shown in Fig.6

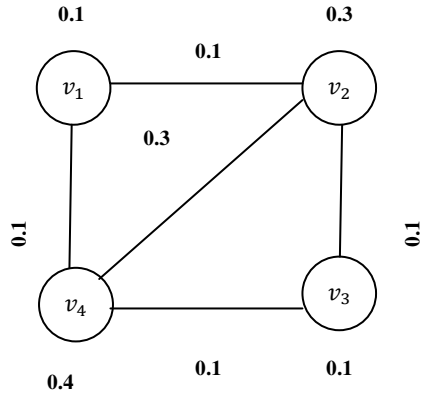

Fig. 6.Fuzzy graph

Using the above pseudo code, the output result for the complement of fuzzy graph is as follows:

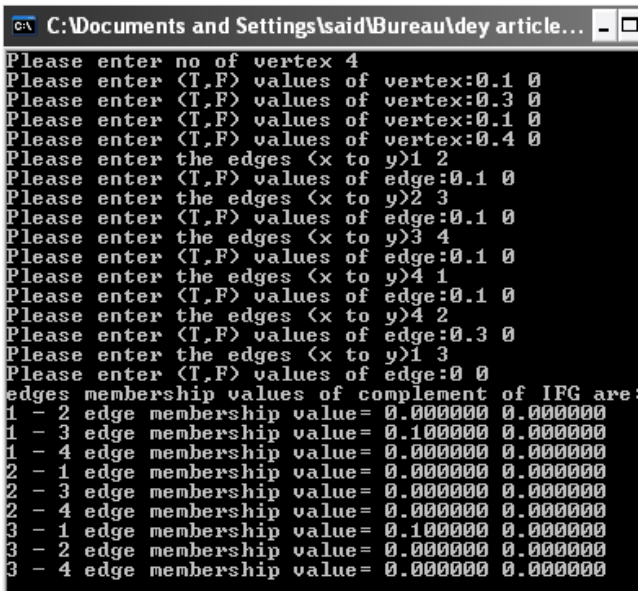

```
C:\Documents and Settings\said\Bureau\dey article...
Please enter no of vertex 4
Please enter (T,F) values of vertex:0.1 0
Please enter (T,F) values of vertex:0.3 0
Please enter (T,F) values of vertex:0.1 0
Please enter (T,F) values of vertex:0.4 0
Please enter the edges (x to y)1 2
Please enter (T,F) values of edge:0.1 0
Please enter the edges (x to y)2 3
Please enter (T,F) values of edge:0.1 0
Please enter the edges (x to y)3 4
Please enter (T,F) values of edge:0.1 0
Please enter the edges (x to y)4 1
Please enter (T,F) values of edge:0.1 0
Please enter the edges (x to y)4 2
Please enter (T,F) values of edge:0.3 0
Please enter the edges (x to y)1 3
Please enter (T,F) values of edge:0 0
edges membership values of complement of IFG are:
1 - 2 edge membership value= 0.000000 0.000000
1 - 3 edge membership value= 0.100000 0.000000
1 - 4 edge membership value= 0.000000 0.000000
2 - 1 edge membership value= 0.000000 0.000000
2 - 3 edge membership value= 0.000000 0.000000
2 - 4 edge membership value= 0.000000 0.000000
3 - 1 edge membership value= 0.100000 0.000000
3 - 2 edge membership value= 0.000000 0.000000
3 - 4 edge membership value= 0.000000 0.000000
```

Example 3 Consider an uniform intuitionistic fuzzy graph as shown in Fig.7

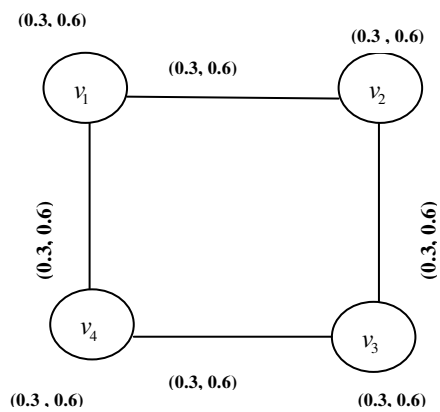

Fig.7. Uniform Intuitionistic fuzzy graph

Using the above pseudo code, the output result for the complement of uniform intuitionistic fuzzy graph is as follows

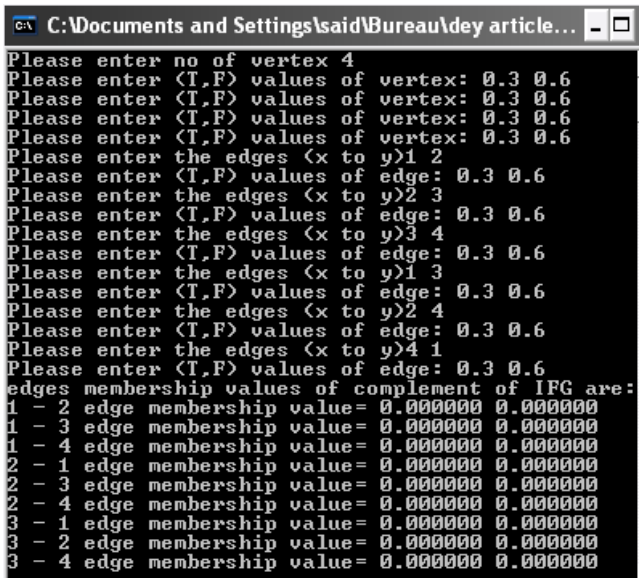

```
C:\Documents and Settings\said\Bureau\dey article...
Please enter no of vertex 4
Please enter (T,F) values of vertex: 0.3 0.6
Please enter (T,F) values of vertex: 0.3 0.6
Please enter (T,F) values of vertex: 0.3 0.6
Please enter (T,F) values of vertex: 0.3 0.6
Please enter the edges (x to y)1 2
Please enter (T,F) values of edge: 0.3 0.6
Please enter the edges (x to y)2 3
Please enter (T,F) values of edge: 0.3 0.6
Please enter the edges (x to y)3 4
Please enter (T,F) values of edge: 0.3 0.6
Please enter the edges (x to y)1 3
Please enter (T,F) values of edge: 0.3 0.6
Please enter the edges (x to y)2 4
Please enter (T,F) values of edge: 0.3 0.6
Please enter the edges (x to y)4 1
Please enter (T,F) values of edge: 0.3 0.6
edges membership values of complement of IFG are:
1 - 2 edge membership value= 0.000000 0.000000
1 - 3 edge membership value= 0.000000 0.000000
1 - 4 edge membership value= 0.000000 0.000000
2 - 1 edge membership value= 0.000000 0.000000
2 - 3 edge membership value= 0.000000 0.000000
2 - 4 edge membership value= 0.000000 0.000000
3 - 1 edge membership value= 0.000000 0.000000
3 - 2 edge membership value= 0.000000 0.000000
3 - 4 edge membership value= 0.000000 0.000000
```

VI. Conclusion

In this paper, we propose a new uniform single valued neutrosophic graph and an algorithm for computing its complement. Some theorems of the uniform single valued neutrosophic graph have been examined. The algorithm in this research also enables us to compute the complement of uniform single valued neutrosophic graph. In the future, we plan to extended this algorithm for computing the complement of others variants of single valued neutrosophic graphs.

Acknowledgment

The authors are very grateful to the chief editor and reviewers for their comments and suggestions, which is helpful in improving the paper

References

[1] F. Smarandache, Neutrosophic Overset, Neutrosophic Underset, and Neutrosophic Offset: Similarly for Neutrosophic Over-/Under-/Off- Logic, Probability, and Statistics, Pons Editions Brussels, 2016,170p

[2] F. Smarandache, Neutrosophy. Neutrosophic Probability, Set, and Logic, ProQuest Information & Learning, Ann Arbor, Michigan, USA, 105 p., 1998; http://fs.gallup.unm.edu/eBook-neutrosophics6.pdf (last edition online) .

[3] H. Wang, F. Smarandache, Y. Zhang, and R. Sunderraman, Single valued Neutrosophic Sets, Multisspace and Multistructure 4, 2010, pp. 410-413.

[4] K. Atanassov, "Intuitionistic fuzzy sets," Fuzzy Sets and Systems, vol. 20, 1986, pp. 87-96.

[5] K. R. S. Narayan and M. S. Sunitha, Some Remarks on Complement of Fuzzy Graphs, IOSR Journal of Mathematics (IOSR-JM), Volume 7, Issue 4 ,2013, pp. 75-77.

[6] K. Bhanu Chander, T. V . Pradeep Kumar, A Note on Uniform Fuzzy Graphs and the Relationship between Regularity and Uniformity of a Fuzzy Graph International Journal of Innovative Research in Science, Engineering and Technology,2017,pp.2425-2431.

[7] L. Zadeh, Fuzzy sets. Inform and Control, 8, 1965, pp.338-353.

[8] M, Vijaya, Complement properties on normal product of strong fuzzy graphs, International Journal of Science and Research, Vol. 4,Issue7, 2015,pp.749-751.

[9] M.Akram, B.Davvaz, Strong intuitionstic fuzzy graph, FILOMAT, vol, 26,2012,pp.177-196.

[10] S. Broumi, A. Bakali, M, Talea, and F, Smarandache, Isolated Single Valued Neutrosophic Graphs. Neutrosophic Sets and Systems, Vol. 11, 2016, pp.74-78.

[11] S. Broumi, F. Smarandache, M. Talea and A. Bakali, An Introduction to Bipolar Single Valued Neutrosophic Graph Theory. Applied Mechanics and Materials, vol.841, 2016, pp.184-191.

[12] S. Broumi, F. Smarandache, M. Talea and A. Bakali, Decision-Making Method Based On the Interval Valued Neutrosophic Graph, Future Technologie, 2016, IEEE, pp 44-50.

[13] S. Broumi, M. Talea, A. Bakali, F. Smarandache, "Single Valued Neutrosophic Graphs," Journal of New Theory, N 10, 2016, pp. 86-101.

[14] S. Broumi, M. Talea, A. Bakali, F. Smarandache, Interval Valued Neutrosophic Graphs, Critical Review, XII, 2016. pp.5-33.

[15] S. Broumi, M. Talea, F. Smarandache and A. Bakali, Single Valued Neutrosophic Graphs: Degree, Order and Size. IEEE International Conference on Fuzzy Systems (FUZZ), 2016, pp. 2444-2451

[16] More information on http://fs.gallup.unm.edu/NSS/.

Appendix

```
#include<stdio.h>
#include<conio.h>
#define max 100
typedef struct {
float
Truth_membership,Indterminate_membership,False_mem
bership;
}fuzzy;
fuzzy
element[max][max],compliment[max][max];//element store the membership value of vertex.Compliment store the value of complimented graph.
int vertex;//store total number of vertex.
```

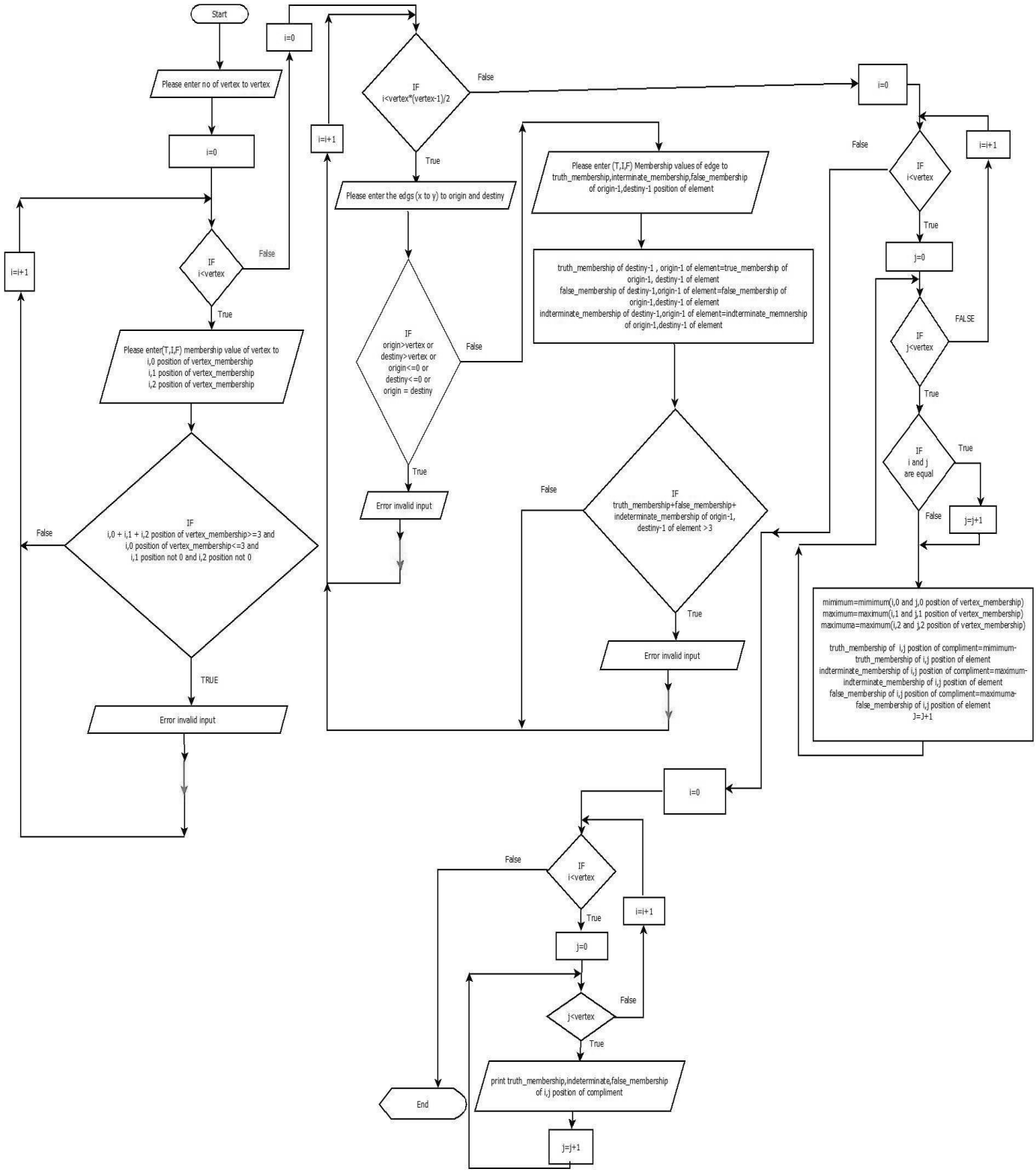
Start
Please enter no of vertex to vertex
i=0
IF
i<vertex
False
True
Please enter(T,I,F) membership value of vertex to
i,0 position of vertex_membership
i,1 position of vertex_membership
i,2 position of vertex_membership
IF
i,0 + i,1 + i,2 position of vertex_membership>=3 and
i,0 position of vertex_membership<=3 and
i,1 position not 0 and i,2 position not 0
TRUE
Error invalid input
i=i+1
IF
i<vertex*(vertex-1)/2
Please enter the edgs (x to y) to origin and destiny
IF
origin>vertex or
destiny>vertex or
origin<=0 or
destiny<=0 or
origin = destiny
Please enter (T,I,F) Membership values of edge to
truth_membership,interminate_membership,false_membership
of origin-1,destiny-1 position of element
truth_membership of destiny-1 , origin-1 of element=true_membership of
origin-1, destiny-1 of element
false_membership of destiny-1,origin-1 of element=false_membership of
origin-1,destiny-1 of element
indterminate_membership of destiny-1,origin-1 of element=indterminate_memnership
of origin-1,destiny-1 of element
IF
truth_membership+false_membership+
indeterminate_membership of origin-1,
destiny-1 of element >3
j=0
IF
j<vertex
IF
i and j
are equal
j=j+1
mimimum=mimimum(i,0 and j,0 position of vertex_membership)
maximum=maximum(i,1 and j,1 position of vertex_membership)
maximuma=maximum(i,2 and j,2 position of vertex_membership)
truth_membership of i,j position of compliment=mimimum-
truth_membership of i,j position of element
indterminate_membership of i,j position of compliment=maximum-
indterminate_membership of i,j position of element
false_membership of i,j position of compliment=maximuma-
false_membership of i,j position of element
J=J+1
print truth_membership,indeterminate,false_membership
of i,j position of compliment
End

```
float vertex_membership[max][6];//store membership value of vertex.
void input()
{
int i,origin,destiny;//origin & destiny store the no. of vertex.And i for iteration.
        printf("Please enter no of vertex:");
        scanf("%d",&vertex);
        for(i=0;i<vertex;i++)
        {
        printf("Please enter (T,I,F)menbership values of vertex:");
        scanf("%f%f%f",&vertex_membership[i][0],&vertex_membership[i][1],&vertex_membership[i][2]);//store the membership value of vertex
        if(vertex_membership[i][0]+vertex_membership[i][1]+vertex_membership[i][2]>=3&&(vertex_membership[i][0]<=3&&vertex_membership[i][1]&&vertex_membership[i][2]))
        {
        printf("Error Invalid input\n");
        i--;
        }
        }
        for(i=0;i<vertex*(vertex-1)/2;i++)
        {
        printf("Please enter the edges (x to y):");
        scanf("%d%d",&origin,&destiny);

        if(origin>vertex||destiny>vertex||origin<=0||destiny<=0||destiny==origin)
        {
          printf("Error! Invalid input\n");
                i--;
        }
                else
        {
        printf("Please enter (T,I,F)membership values of edge:");
scanf("%f%f%f",&element[origin-1][destiny-1].Truth_membership,&element[origin-1][destiny-1].Indterminate_membership,&element[origin-1][destiny-1].False_membership);//store th membership value of edge.

element[destiny-1][origin 1].Truth_membership=element[origin-1][destiny-1].Truth_membership;//store the truth-membership value of edge.
element[destiny-1][origin-1].Indterminate_membership=element[origin-1][destiny-1].Indterminate_membership;//store the indterminate-membership value of edge.
element[destiny-1][origin-1].False_membership=element[origin-1][destiny-1].False_membership;//store the False-membership value of edge.
if(element[origin-1][destiny-1].Truth_membership+element[origin-1][destiny-1].Indterminate_membership+element[origin-1][destiny-1].False_membership>3)//store the membership value of edge.
{
printf("Error! Invalid input\n");
i--;
}
}
}

}
void output()
{
        int i,j;
        float maximum,minimum,maximuma;
        printf("The complement of Single valued neutrosophic graphs is:\n");
        for(i=0;i<vertex;i++)
{
        for(j=0;j<vertex;j++)
{
        if(i==j)
        j++;
if(vertex_membership[i][0]>vertex_membership[j][0])
minimum=vertex_membership[j][0];//find minimum value between two vertex.
else
minimum=vertex_membership[i][0];//find minimum value between two vertex.
if(vertex_membership[i][1]>vertex_membership[j][1])
maximum=vertex_membership[i][1];//find maximum value between two vertex.
else
maximum=vertex_membership[j][1];//find maximum value between two vertex.
```

```
if(vertex_membership[i][2]>vertex_membership[j][2])
maximuma=vertex_membership[i][2];//find maximum value between two vertex.
else
maximuma=vertex_membership[j][2];//find maximum value between two vertex.
compliment[i][j].Truth_membership=minimum-element[i][j].Truth_membership;//calculating compliment.
compliment[i][j].Indterminate_membership=maximum-element[i][j].Indterminate_membership;//calculating compliment.
compliment[i][j].False_membership=maximuma-element[i][j].False_membership;//calculating compliment.
}
}
        for(i=0;i<vertex-1;i++)
{
         for(j=0;j<vertex;j++)
{
         if(i==j)
 j++;
printf("%d - %d edge membership value= %f %f %f \n",i+1,j+1,compliment[i][j].Truth_membership,compliment[i][j].Indterminate_membership,compliment[i][j].False_membership);//printing complimented graph.
}
}
}
void main()
{
        input();
        output();
        getch();
          }
```

Received: July 20, 2017. Accepted: August 8, 2017.