Radical devices

Rethinking Art and Architecture as Forms of Dissensus in Urban Environments

commons
architettura
artefatto
ricerca artistica
spazio pubblico
radicalità

commons
architecture
artefact
artistic research
public space
radicality

Nobile, Maria Luna[1]; Melina, Francesca[2]

[1] Umeå School of Architecture, Umeå University, Associate Professor in Architecture, Umeå, Sweden.
https://orcid.org/0000-0001-8958-2999
maria.nobile@umu.se
[2] USS Pavia, Ca' Foscari University of Venice, PhD SDC in Environmental Philosophy, Venice, Italy.
francesca.melina@iusspavia.it

Citation: Nobile, M.L.; Melina, F. (2024). "Radical devices", UOU scientific journal #08, 116-129.

ISSN: 2697-1518. https://doi.org/10.14198/UOU.2024.8.12
This document is under a Creative Commons Attribution 4.0 International license (CC BY 4.0)

Invited Article

L'obiettivo di questo articolo è quello di indagare le possibilità aperte dagli interventi radicali nello spazio pubblico: è possibile favorire la riflessione e creare una metodologia critica per analizzare il tema dei Commons nel contesto urbano? Presentando il progetto "Stente: Residual Zones" come esempio, l'obiettivo è esplorare queste domande utilizzando Umeå come caso di studio. Attraverso la creazione di un oggetto architettonico concepito come artefatto e installazione, il progetto cerca di utilizzare le pratiche artistiche e le teorie architettoniche come strumenti per coinvolgere i residenti della città in un dialogo attivo sugli spazi comuni. Partendo da un quadro teorico per collocare il potenziale critico dell'arte e dell´esperimento architettonico negli spazi pubblici, in questo lavoro il progetto è visto come un esempio di dispositivo critico temporaneo in movimento, che raccoglie e amplifica le voci degli abitanti attraverso la città: vuole rappresentare un invito aperto a reinterpretare i confini tra natura e città, ponendosi come una forma radicale (dal latino radicalis) di dissenso (Rancière 2010). L'esperimento è stato condotto presso la Umeå School of Architecture tra marzo e maggio 2024 nell'ambito del gruppo di ricerca "Designing the Contemporary City" dell´Universitá di Umeå.

The aim of this paper is to investigate the possibilities opened up by radical interventions in public space: is it possible to foster reflection and create a critical methodology for analysing the topic of Commons in the urban context? Presenting the project "Stente: Residual Zones" as an example, the aim is to explore these questions using Umeå School of Architecture as a case study. Through the creation of an art/architectural object, the project seeks to use artistic and architectural practices as tools to engage city residents in an active dialogue about Common spaces. Starting with a theoretical framework for situating the critical potential of art and architectural objects in public spaces, in this paper the project is seen as an example of a temporary critical moving device, gathering and amplifying the voices of the inhabitants through the city: it aims to represent an open-ended invitation to reinterpret the boundaries between nature and the city, posing itself as a radical (from the latin radicalis) form of dissensus (Rancière 2010) The experiment was conducted at the Umeå School of Architecture between March and May 2024 within the research group "Designing the Contemporary City" at Umeå University.

INTRODUCTION

Buildings that have lost their original function, machines to be inhabited again, empty areas and complexes that have lost their original purposes are more and more central to the current architectural debate. Looking at our cities and urban context/s at different latitudes we realise that architecture has a responsibility in acting by considering a "new reality"[1]. This reflection on the notion of re-use and re-activation of empty areas is a starting point to investigate new practices and dynamics development of our contemporary world.

In the everyday practice architects are constantly facing simple questions; For whom do we design? When does a space become a place? What is the limit between material and immaterial actions and when does architecture have a real impact on society? How do we live *in Common*? We could think about these questions and reflect on them from a radical perspective. This essay is based on an experiment that sees architecture and art intersecting other disciplinary fields. The experiment, central to this essay, has been conducted at Umeå School of Architecture between March and May 2024 as a result of a theoretical study on the notion of Commons in the urban context.

By looking at the specific context of Umeå, in the north of Sweden, authors reflect on how radical interventions in the public space can define a method to read and understand this reality, fostering an active dialogue among experts, the city and its inhabitants.[2]

PLACING THE MATTER IN CONTEXT

Our epoch seems to be one in which everything has to be re-discussed, tested and reshaped. On the one hand, we have evidence of an increasingly immaterial world, detached from the immanence of the sensible promoting new technologies (e.g. AI) that allow us to reach unknown stages of abstraction. On the other hand, we have to face the issues raised by global warming and the environmental crisis we are witnessing - and we can say that there is nothing more related to sensible and materiality than this. Among this apparent contradiction between two possible different readings of the world, a space of critical reflection is what is needed – meaning reflection both in its material and immaterial sense.

The premise from which it's possible to try to build this space is regarding a shift that humanity cannot ignore anymore: the concept of Anthropocene as that which has raised consciousness about what the world is facing today. This is for mainly two reasons. Firstly, *nature* – which used to be considered the immutable stage for human actions – is reacting to the violent actions of humanity. Secondly, innovation and science itself are party to the cause of the environmental collapse being witnessed. Assuming the idea of an increasingly immaterial world or the need for a more material comprehension of what is around are two sides of the same coin. What humanity has to face is the necessity of finding new forms of access to the world and new possible paradigms to read our contemporary situation: the failure of such concepts as progress, neutral knowledge and rationality and science as a universal model clearly shows the impossibility of further using the currently adopted systems of thought. What is called into question is the opposition between nature and culture – the foundation of the seeming contradiction between a material/immaterial vision of the world. Secondly, knowledge production needs to be historicized within a social, political and economic framework.

In this sense, it's important to reflect on the city as constructed by humans and on the osmotic ecological relationship between them and the city. The city has been defined as the human thing par excellence. *The city, for its genesis and due to its nature, results simultaneously from the biological procession, from organic evolution and aesthetic creation. It is, at the same time, object of nature and subject of culture; individual and group; lived and dreamed; human thing par excellence* (Lévi-Strauss 1968). Following Lévi-Strauss' definition of the city it is important for us to reflect on the notion of ecology - from the Greek *oikos* (home, but also collective) + logos (discourse) - indicates the study of the relationships between living organisms and the environment they inhabit. The concept of ecology, as the relationship between human beings and their own environment, can be found in the way we – as human beings coexisting together with non-human entities – live in the city (Nobile 2007).

A NEW BODY-CENTRED PARADIGM

What, then, can be a new orientational paradigm useful to face Anthropocene challenges and to embrace the material-immateriality of the world? The idea of a new *body-centred paradigm* is what this paper would like to argue as something that can bring together the material and immaterial visions of the world. This is starting to rethink the relationship with materiality to develop critical theories to re-read what's immaterial. The proposal is to shift from what is rationality, culture, and science to what is sensible, nature and perception. This perspective discloses two different possibilities: on the one hand, to see how the body shapes peoples' way of acting and building the surrounding world, indicating new possible understandings of human history; on the other hand, to recognize how the body is fully and constantly affected by the environment itself, unveiling social structures' dependency on environmental aspects. The consequences of these two possibilities open up what has been defined as a *"necessary critical space"* in terms of an epistemological transformation: it seems possible to think of knowledge as something characterised by mutual exchange, blurring the boundaries of what is usually considered inside and outside. Moreover, this leads to an openness towards otherness, where the human perspective is just one among others. Applying this perspective to society as a whole means to shift from bodies to what one might call social bodies. The body-oriented paradigm produces a shift in how the subject produces knowledge, but also a wider epistemological transformation (Renn 2020) involving the social body in its entirety. In other words, it's necessary to see the social body itself as affecting and affected, as a perceiving element that acts to shape - and is shaped by - the environment. Concerning this epistemological turn, perhaps it would be better to speak of cultural bodies instead of social bodies, to better understand what is meant. Different cultural bodies are characterised by forms of knowledge belonging to different social bodies in different parts of the world. It would, then, seem possible to speak of the need for new cultural bodies that respond to the necessity of building a common vision of the world that embraces this openness as the main outcome of the body-oriented paradigm. This enables new readings on the relationship between nature and culture, human and non-human, body and environment.

This reflection has its foundation in the Radical Movement, and in specific this experiment relates to the work of Archizoom Associati in the late 60´s. The reflection on the body/space paradigm lies in the interpretation of the work of Andrea Branzi, a series of projects relating the domestic environment with the notion of theatre and scenography (Fig.1). A social space, a space for fun (Devereux, Alvado Bañón, Hadjisoteriou 2021). In this sense, the interpretation of the space is highly influenced by the perception we have of objects in the space, and how form, static and pure, can become dynamic when the relationship between the human dimension and the space are designed and reconfigured.

In the exhibition "THE FOUR BEDS" held at "Institut d'art Contemporain Villeurbanne/Rhône Alpes" in Lyon, 1967, Ettore Sottsass asked each of the Archizooms to design a bed in an environment on a scale of 1:10 to introduce the group in Domus issue number 455. These four beds are the manifesto of Radical Architecture. Here we maintain that the invention that comes before the product is its typological invention, that the object of design is not an archetype, an abstract geometrical form that is as elementary as possible - the better to meet the so-called principles of rational manufacturing - but the representation of an imagination, a piece of life that attracts a specific intended user who dreams of rainbows and loves Bob Dylan, and that recognizes that pop imagery is a revaluation of popular taste, or kitsch, against the good taste of elegant, composed, geometric, white Braun-style design (Sottsass 1967).

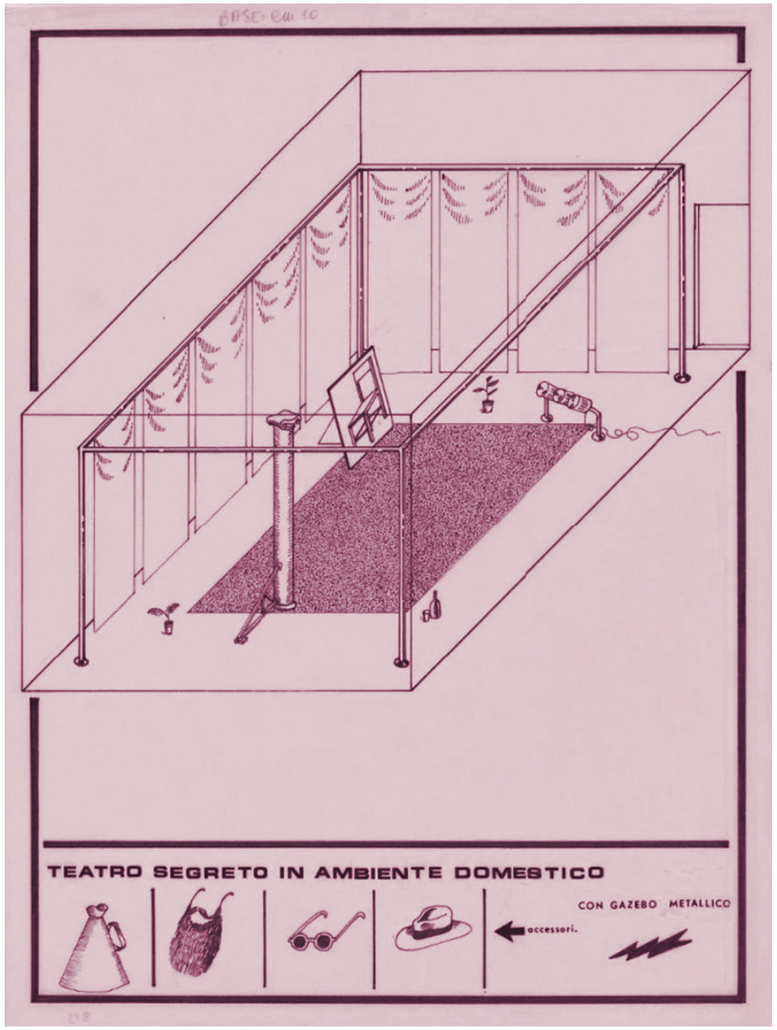

Fig.1 - Andrea Branzi, Archizoom Associati. Teatro segreto in ambiente domestico, 1968. Centre Pompidou Paris. Courtesy of © Adagp, Paris.

Another reference is the work of Ugo La Pietra in the famous experiment *Commutatore Urbano* where the artefact is a device that re-establishes new parameters between the body and space.

We can refer to these readings, but it's important to go beyond, as Andrea Branzi argue in a recent interview:

The legacy of the twentieth century, its dogmas and its principles of ethics,

are obsolete and useless; the twenty-first century presents itself with totally original and contradictory features, which need to be reflected upon in an exploratory way, without attempting to recreate a new orthodoxy, but rather a rarefied system of anarchic hypotheses and experimentation, more akin to an era like ours – experimental and anarchic (Branzi 2014).

SPACE AND COMMONS

At the centre of this investigation, as this paper would like to argue, is the concept of space, both built and natural. Space is a place from which it is possible to analyse humans' relationship with the environment and actively enact this new vision of the world that builds a more eco-logical relationship open to different perspectives and uses. It is feasible to say, to sum up, that the whole issue is a matter of space and, to go more into depth, a matter of the idea of the City (or the urban dimension), considered a privileged space where to enact this commutation towards new forms of inhabiting and acknowledging the world. The urban dimension, indeed, can be considered as a *Second Nature* (Vercellone 2013) built by humans to adapt, creating their environment. It represents humanity's emancipation from savage nature. So, to say it is the space where humanity has enacted the separation from what's material, sensible and related to a more body-related dimension affirming its superiority. It's the place to be for a science that stands apart from the world, from history and social implication: it's the habitat for the paradigm of Universal Rationality, for the unstoppable progress that has led us to the present environmental crisis (Renn 2020). That's why starting from this specific dimension, it is possible to look at the history of humanity from a different lens and try to rewrite ways of behaving in the world.

How can this change be actively implemented in terms of producing new concepts? How can the space in its material and immaterial definition be defined and through what methods? The proposal looks at art and architectural practices in spaces to see how this process can respond to the need to create a new common vision of the world: namely going from an immaterial collective to a material collective creating new Commons. What idea of space is to be assumed? The notion of Commons seems to be a guiding concept from which it is possible to start to unfold this argument. The Encyclopedia Treccani defines Commons in the following terms:

The set of resources, both material and immaterial, used by multiple individuals and which can be considered as the collective heritage of humanity (Treccani 2012).

This collective heritage of humanity can be defined in terms of spatial dimension as follows:

Understood as distinct from public as well from private spaces, Common space emerged in the contemporary metropolis as sites open to public use in which, however, rules and forms of use do not depend upon and are not controlled by a prevailing authority. It is through practices of commoning, practices which define and produce goods and services to be shared, that certain city spaces are created as common spaces (Stavrides 2016, p.2).

It is possible to shed light on several characteristics underlined by this definition. Firstly, it implies a community: a plurality of people sharing resources and governing them and their everyday activity in common (Commoning). On the other hand, the rules and types of use which are in form in it do not depend upon and are not controlled by a prevailing authority. Finally, there's a structure of shared knowledge as shared information about values and behaviours circulating within it (Stavrides 2016).

ART AND ARCHITECTURE AS COMMONS' ACTIVATORS

Why art and architecture and how to relate them to this concept? To go more in-depth, can art and architecture have an impact in the way communities are defining a new sense of belonging in spaces? How do communities understand the space and how does the architectural project relate with the needs of a community? The relationship between these two disciplines in recent years seems to be the key to rethinking spaces in a new and more ecological way – to say it in other words as Commons. The idea of creating community and communal spaces underlies socially engaged artistic practices and an emerging typology of architecture that experiments with radical temporary structures. Starting from what is defined as the spatial turn in the 1970s we can see how from space considered as a «mere backdrop for an unfolding time, space became intimately linked to lived experience» (Dodd 2020, p.34). This new vision can be considered as related to a "realized abstraction" moving away from the old vision that considers space as related to the "conception" and the "perception". This can be considered a more "comprehensive mode of spatial thinking" that moves:

Beyond those traditional dualities (objective-subjective, material-mental) to create a "consciously spatial praxis based in a practical and political awareness that we can act to change" (Elden 2007, pp. 105-106) which was also seen by some as a way to "make theory practical" (Soja 2009, p.21) (Dodd 2020, p.36).

This idea of new spatial praxis is strictly related to a political reading of space meant as a condition of *"rupture and change"* which Rancière calls *"dissensus"* to mean a redistribution of the sensible -see below (Rancière 2010). To quote the philosopher:

I call the partition (partage) of the sensible, that system of sensible evidence that simultaneously makes visible the existence of something common and the divisions that, on that common, define places and respective parts. A partition of the sensible thus fixes at the same time a shared common and exclusive parts. This partition of parts and places is based on a division (partage) of spaces, times and forms of activity that determine the very way in which a common lends itself to participation and the way in which one or the other will participate in this partition (Ranciere 2010, p. 15).

It's a partition of times and spaces, visible and invisible that defines what's common to a particular community of Commoning. The idea of space that takes shape from this perspective concerns a political vision of space as a place where to form new communities of practice, redefining the immaterial meaning of the space depending on the needs of the (temporary) interacting community – to say it with Rancière "who can have a share in the common depending on what they do". It is possible to return to the idea of the cultural body and to analyse how this body is affected and affects the space it traverses. Also, the notion of Commons relates to the concept of process, time and fugitive democracy (Caneschi, 2021). Within this theoretical framework, art and architecture are seen as useful practices for analysing the characteristics of these interactions: it is a matter of making social bodies aware of the meanings attributed by that specific social body to a space. On the other hand, they can provoke those meanings aiming to change perspective and create new qualitative nuances and new uses of the space. The critical space is now open both on the side of the analysis of the main characteristic of space and on the tangible chance to change its connotations.

Art and politics [and also architecture] are both forms of dissensus, meaning they are exceptions to the logic of normal rules governing social interaction, where genuine political action involves an emanclipation from the conventional frames in which bodies are ordered (Dodd, 2020, p.37).

This emancipation of bodies is what characterises what we can call the critical potential of art and architecture practice. They are related to the practical dimension of living in the city, involving different everyday practices but also breaking the flux of habits. In the experience of works of art we are dealing with a new formation of practices, which implies the indeterminacy of the future and induces a renegotiation of other practices.

If we want to understand art as a praxis of the imagination, we must understand the impulse that interaction with works of art gives to human practices as such (Bertram, 2017).

Not only art but also some forms of architecture can provoke the same effect is what this paper would like to suggest. Now that the idea of space and the idea of what kind of practices are acting in it has been defined, it is possible to move to a practical sample to unfold other issues left behind.

"STENTE: RESIDUAL ZONES" PROJECT AS AN EXPERIMENT

Within the constructed theoretical framework, it now seems necessary to give an example of the critical potential of an architectural intervention in the space. This project configures itself as an artefact designed and produced in different phases by understanding the process itself as a practice. From the idea to the concept and its testing in the space, the artefact becomes an architecture that makes possible an artistic practice. Conceived as a performative device in the urban space the artefact has been conceived as a central element in the project. Not claiming what will follow as a solution or a final proposal on how things have to be done, the aim is to try to analyse several criticalities and potentialities of the direct action in space.

Starting from what it's possible to call an unconventional approach to architecture, the aim of *"Stente: Residual Zones"* project was to build a movable device as a research tool that symbolises the necessity of the physical occupation of the space - making it Common. This project was implemented in Umeå at Umeå School of Architecture and in collaboration with the UmArts Research Centre at Umeå University, in the period from the 16th of March to the 31st of May 2024. The goal was to portray the changing nature of the relationship between people and the environment in the area, trying to test the two research hypotheses: a). Art and art practices seen as potential producers of Common Spaces and Common Action; b). Art seen as a potential producer of dialogue and reflections toward the construction of a Common Knowledge. From this theoretical premise, the concept was to create a physical space of dialogue in which to involve the community in Umeå collecting their perspectives of inhabiting the city.

The data revealed by the inquiry would serve as a basis for further development of the research project involving different residual areas in the city of Umeå to define a framework of intervention for future actions. The main idea was to build a device that could potentially serve multiple uses: a movable living room, a portable tea house, a place of gathering and exchange.

THE CONTEXT: UMEA AS A CASE-STUDY

As for every experimentation in situated art and architecture, the context of analysis was important in defining the goals: Umeå was taken as a fertile ground of experimentation due to several reasons. At first, the city can be considered a space in constant change due to its environmental condition: experiencing a harsh winter and a short but hot summer, the whole territory modifies in the different seasons of the year creating different spaces in terms of accessibility and uses. This is mainly in terms of places assigned for snow stacking and ice forming, which creates new potential pathways around the city and across the river and lakes.

Umeå is also currently facing an important transformation as demolition and reconstruction are in progress and the city aims at increasing the number of inhabitants in the next 20 years.

To add to this, Umeå results to be a fruitful field of analysis in relation to Commons: the ongoing transformations and urban regeneration projects of the last 10 years provide a reference, although during the winter months many of these spaces are inaccessible; at the same time, despite the lack of attention that there is within the urban context for the concept of commoning, it seems to be extremely present as far as the natural environment surrounding the city is concerned. This starts from the presence of a law that protects the relationship between human beings and the environment (Allemansrätten)[3] and that refers to the theme of common goods, identifying nature as the shared resource as far as its use and the caring relationship that should be entertained with it are concerned. On the other hand, the whole urban space is governed by strict rules regarding the uses and the accessibility of the spaces – going from the distribution of what is public and private to laws that delimitate designated spaces for public speeches and that prohibit live music in the streets. For those reasons, it results of main interest to analyse the public perception of what can be considered Common or not – leading to the partition of the sensible discussed above (Fig.2).

RESIDUES AS THE KEY CONCEPTUAL ELEMENT

To foster this exchange around the topic of interest, the concept of residue and residual spaces was taken as a suitable starting point. Why residue?

Understood as leftovers, unseen spaces that inherently contain multiple undisclosed perspectives and drawing inspiration from the concept introduced by Gilles Clément, residual spaces seem to have particular characteristics useful to fulfil the scope of creating dialogue around the Commons (Clément 2005). They are liminal to society and contain a potential multiplicity: they can be considered as bordering spaces that blur the lines between culture and nature. On the other hand, they are connected to otherness: this is due to their being inhabited by plants, animals, and material objects that have regained their place due to the absence of human activity. Last but not least, they have a specific environmental character related to a past community: they have been excluded from the current cultural body but still being within the city. Working in cooperation with the ongoing research project *"Re-use and Re-activate Urban Voids: a Paradigm of the Contemporary City"*[4] the starting point of the research on-field was an analysis of the territory to locate unused and abandoned spaces – both private and public – to understand them in the context of urban projects and potential regeneration spots. Focusing on public spaces, this overview was shifted to spaces along the roads and in the main squares, trying to understand what part of these spaces can be still considered residual – as the urban voids above mentioned: spaces characterised by a multiple of unexpressed potential but being unseen in everyday life. The city centre was taken as the research area: a path was designed through the city outlining the spaces corresponding to the underlined features in Fig.2. A device was then designed to be movable and to temporarily occupy those spaces, shedding light on them. Coming back to the idea of residue, a cooperation with a local ethnobotanist[5] was initiated to identify endemic species of plants whose usages and benefits were forgotten, despite their presence on the territory. The aim was to bring the inhabitants closer to the residues of their land, starting from the urban to the rural and forested ones. Several plants were selected which were capable of producing drinkable infusions: the infusions made with Taraxacum, Trifolium, Filipendula, Chamerion Angustifolium were the starting point for sparking the conversation. But where to find a meeting point between –architectural research – that produces temporary objects to occupy the space –design – which creates multifunctional objects to live differently in the space – and art – which works with concepts and representations to drive reflections? The concept of residue is once again useful to close the circle. The stone (Fig.3), as the representative of what's residual, was taken as the leading idea to create the aesthetic and artistic concept of the device. The tea house was not only decorated with stones whose textures trace the topography of the city but also as the main vehicle to attract people and make them interact: the movable device, in fact, serves stone tea. Being just a conceptual insight to foster people's attention, the infusions were made only with wild herbs, but this deceit was explained to start the conversation around Commons and as a fruitful sample of what can be considered a residue. Starting from nature, that which the inhabitants are used to consider as a common resource in which to practise commoning, the discussion was driven by the urban and the city, their rules and potential uses.

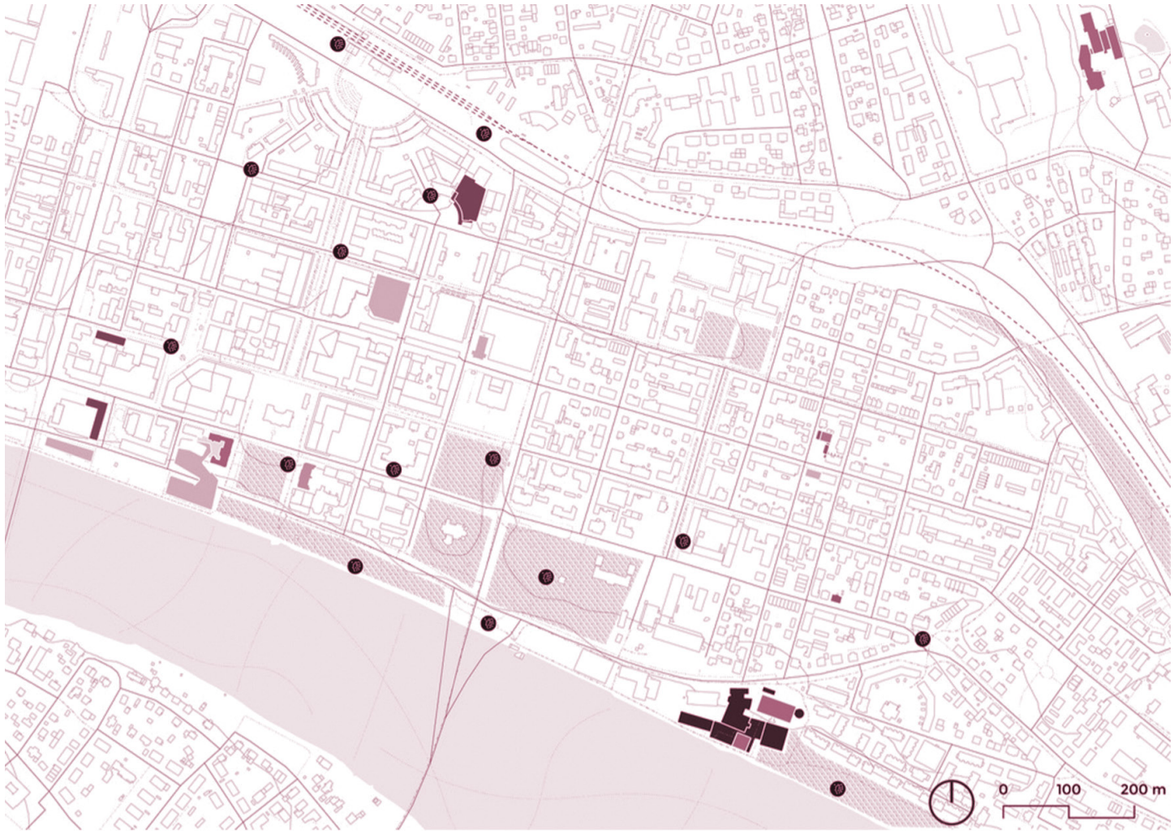

Fig.2 - Map of the city centre that underlines the spots individuated during the research phase as residual spaces. Credits: Danila Della Monica.

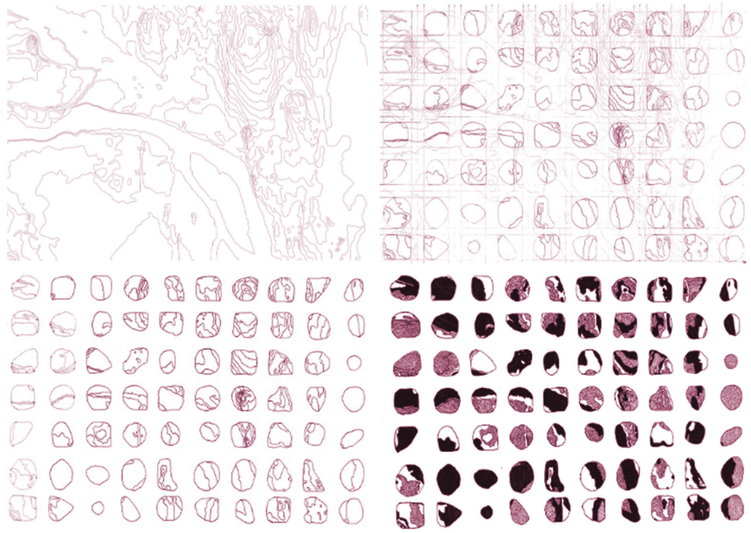

Fig.3 - Drawings made by Francesca Melina. Starting from the topography of the city, the aesthetic of the device was designed using the stone as the core element.

PRACTICAL EXPERIMENTATION ON-FIELD

Several on-field experimentations were conducted to test the effectiveness of the device and provide the space for interviewing to the inhabitants. Starting from the map drawn underlying the residual spaces within the city centre, different spots were selected responding to the need to find the widest range possible of typologies of inhabitant´s (students, adults, senior, families). The original idea was to follow a pathway touching all the residual spaces identified, moving circularly, the starting and ending point being UMA (Umeå School of Architecture). Part of the process, then, was the moving of the device itself: carrying the weight and walking around the urban spaces have to be understood as part of the practice of regaining the freedom of use of the city and its public (common) spaces. It is a common practice requiring at least four people. These actors have been involved through a common call and a collective dinner organised at the School of Architecture in the first stage of the process to contact researchers and students interested in being an active part in the experiment.[7]

Due to the timeframe available, only three places among the whole selection were inserted in the final experimentation: the main square of the city centre, a green area in front of UMA (Umeå School of Architecture) and a spot along the river in the new pedestrian path as part of a regeneration project designed by Umeå Kommun in 2014. Different participatory methods have been tested going from a more direct approach, asking people to come and sit on the device and give a bit of their time in exchange for a drink of stone tea, to a silent and non-invasive one, leaving the device alone and observing its interaction with the environment and who might be crossing the space. As mentioned above, the context turns out to be crucial in defining the type of interaction with the community: the typology of availability and understanding of what the device was supposed to be, varies depending on the different location.

Fig.4 - Alongside the Ume River. Credits: Raphael Avellar M. De Vargas.

It seems necessary now to try to reconstruct all the process briefly introducing the changing conditions that determined the variations in the results obtained.

The experiment started on the 10th of May along the riverside[6](Fig.4). As briefly mentioned above, all the riverside was subjected to a massive regeneration intervention in 2014, when Umeå was nominated European Capital of Culture. The whole city was subjected to a large-scale operation where all the pathways along the river were built – also embracing the Umeå University Art Campus (Including Umeå School of Architecture, Umeå Design Institute, Bildmuseet and Umeå School of Art). This place was chosen mainly because of its inaccessibility during the winter season: all the spaces used during the summer for wandering and picnicking, all the installations and playgrounds placed along the trails become useful places to accumulate snow and turn into sheets of ice. Not only in winter, when the space is inaccessible and dangerous, but also several critical issues related to the usability of the trails in summer have been raised. The aim, then, was to understand better how the population perceived this temporary residual space. Despite its being so suitable from a theoretical perspective, this space proved to be a crossing point, used to move from the city centre and the suburbs (and vice versa): the inhabitants were not available to stop, sit and talk because they were in the middle of a transfer from one place to another. Just one father with their daughters stopped providing information seemingly contrary to the evidence of the facts. Although no one else seemed eager to spend time in that space, using it only as a crossing space to go from point A to point B, he was enthusiastic about the improvement brought about by the Municipality intervention. The absence of functional architectural objects for people to stop, such as benches or other supports, was further evidence. One aspect that has been confirmed by this exploration is the lack of connection between the riverside and the city centre. Umeå has been an industrial city mainly having the river as an infrastructure. With the regeneration project of 2014 the river became a park connecting horizontally the west to the east. It resulted in the need to improve those connections north-south trying to improve the relationship with the water.

The second place where the experimentation was held was the main square Rådhustorget. It was the place where the test was most repeated. This is due to the diverse range of inhabitants who pass through this space every day and the nature of the square as a central meeting point within the city centre. The square is a big and empty space, in which some stalls and markets come to occupy around the year. Here both the leaving-the-device-alone and the direct interaction mode were explored. Interestingly, were the different outcomes and the emerging perspectives opened from the

Fig.5 and 6 - Experimenting in the main square of Umea. Credits: Francesca Melina, Raphael Avellar M. De Vargas.

Fig.7 - Portray of the device in front of UMA. Credits: Laura Bisbe Armengol.

dialogues: the square is perceived by the inhabitants as something useless compared to the parks and the green area inside the city centre. There is a clear need to have more green spaces – complaints were made that they were to be too little and too crowded during the sunny days – and more common gathering spaces for winter – a time of the year when most of the inhabitants stay at home due to climate conditions and the absence of other alternatives. Returning to the perception of the device in space, from a few inhabitants, it wasn't sensed as something out of the place or strange – they used it as a bench (Fig.5), unconcerned about the people standing around the structure offering them tea. On the other hand, by some, it was perceived with suspicion, as something potentially dangerous – what kind of beverage are you really offering me? – and a lot of effort was put into engaging in a discussion (Fig.6). One of the main differences noted in this context of experimenting was the presence or absence of native speakers: the grade of suspiciousness increases if no Swedish speakers were doing the first interaction. This is an observation that is valid for all the field experiments but seemed more evident in this space – being the one where most of the time was spent. Outcomes of the experiment in the second location Rådhusesplanaden / Rådustorget confirm that the main square designed in the same period of time as the riverfront, when Umeå has been elected as European Capital of Culture, is perceived by the inhabitants as an isolated island with no real connection with the main street Kungsgatan nor with

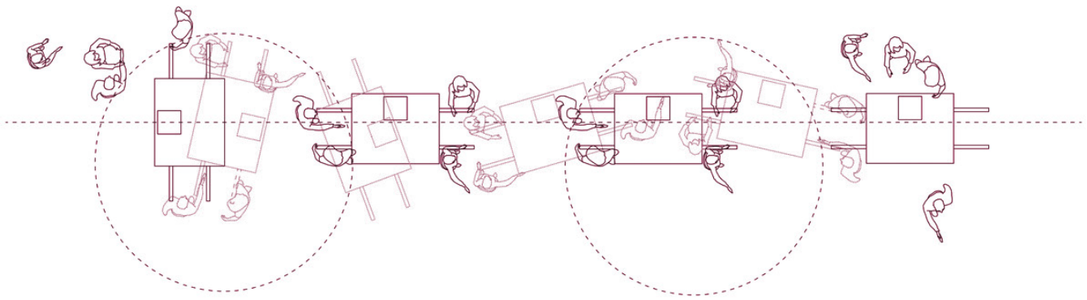

Fig.8 - Drawings by Maria Luna Nobile, observation of the device in movement and different interaction between the artefact, the space and the bodies.

parks and riverside. The design of the square, which has a specific infrastructure to keep it free from ice and snow during the winter time, is perceived as empty. The main Municipal Hall, now used only for special events appears like a scenographic background and on the opposite side the relation with Rådustorget - the streets that connect to the main train station - seems to be disconnected. Despite the ideal design of a square that responds to minimalist and modern criteria in relation to the design of the space, it seems not to be perceived by the users as a common space, rather as an institutional space.

The third and last space of experimentation was alongside the Umeå School of Architecture. Being in the middle between the Umeå Art School and UID Umeå Design Institute and Bildmuseet, the device in the space was perceived as an art/architectural installation – which it was. Placement influences people who are passing by and provides the context for reading the meaning and intentions of the structure itself. A lot of curiosity was experienced in this location: questions and spontaneous interaction, direct interplay with the teapot and instinctive approaches to the reading material left on the wooden board of the device. It was, for sure, the most fertile space in terms of creating dialogue and fulfilling the scope of the art/architectural object – but also the least challenging. The space was selected as a pathway and a junction between different realities: the schools on one side and the city centre on the other. As for the riverside, there are no specific functions given to this space: no benches and no sitting spots, but only a gravel paving dividing the river and the meadow in front of UMA (Fig.7). The aim was to involve students, visitors of the museum and citizens walking along the river. The last category became the most attracted. The interaction confirmed what emerged during the previous conversations: the city seems to be not considered a space of commoning but is mostly used to respond to consumerism needs and fulfil everyday duties. On the contrary, natural outdoor spaces are naturally perceived as gathering spaces: nothing more than a recognition sign is needed to give instructions to friends who want to gather. The winter season most of the time is not even mentioned: it seems to be a “bubble” where no interaction, despite the one devoted to work, are brought into consideration. The time of commoning is summer when the outdoors become fully accessible and the light shines for 23 hours.

The main outcome of all the on-field exploration was this disparity between nature perceived as a real Common and urban areas sensed as something not about a feeling of community and only used as crossing spaces. It is possible, then, to say that the law echoes the lived situation – with the Allemansrätten, on one hand, and the strict forbidding on the other side – but it does not mean that

the population is pleased with the way conditions are. Many were the objections towards the design and management of public spaces within the city. This also reflects a social and political framework that sees the State as an actor that provides facilities for the life of every inhabitant equally, that affects the way common and collective actions are perceived. What transpires from the interactions with the inhabitants is a general dissatisfaction with the absence of spaces that can be used as gathering points and the presentation of voids, in the city of Umeå, of surfaces that have no specific use. In this sense the experiments have been extremely useful for this research, and it will lead to a future phase where proposals can be elaborated through a participatory process and a dialogue with the institutions can be held (Fig.8-9-10).

FURTHER REFLECTIONS. WHY RADICAL?

This experiment has provided an opportunity to expand on reflections and now shared in this essay with a broader audience, hoping to spark further dialogue on the subject. To better understand why this experiment is deemed as radical, it is essential to first

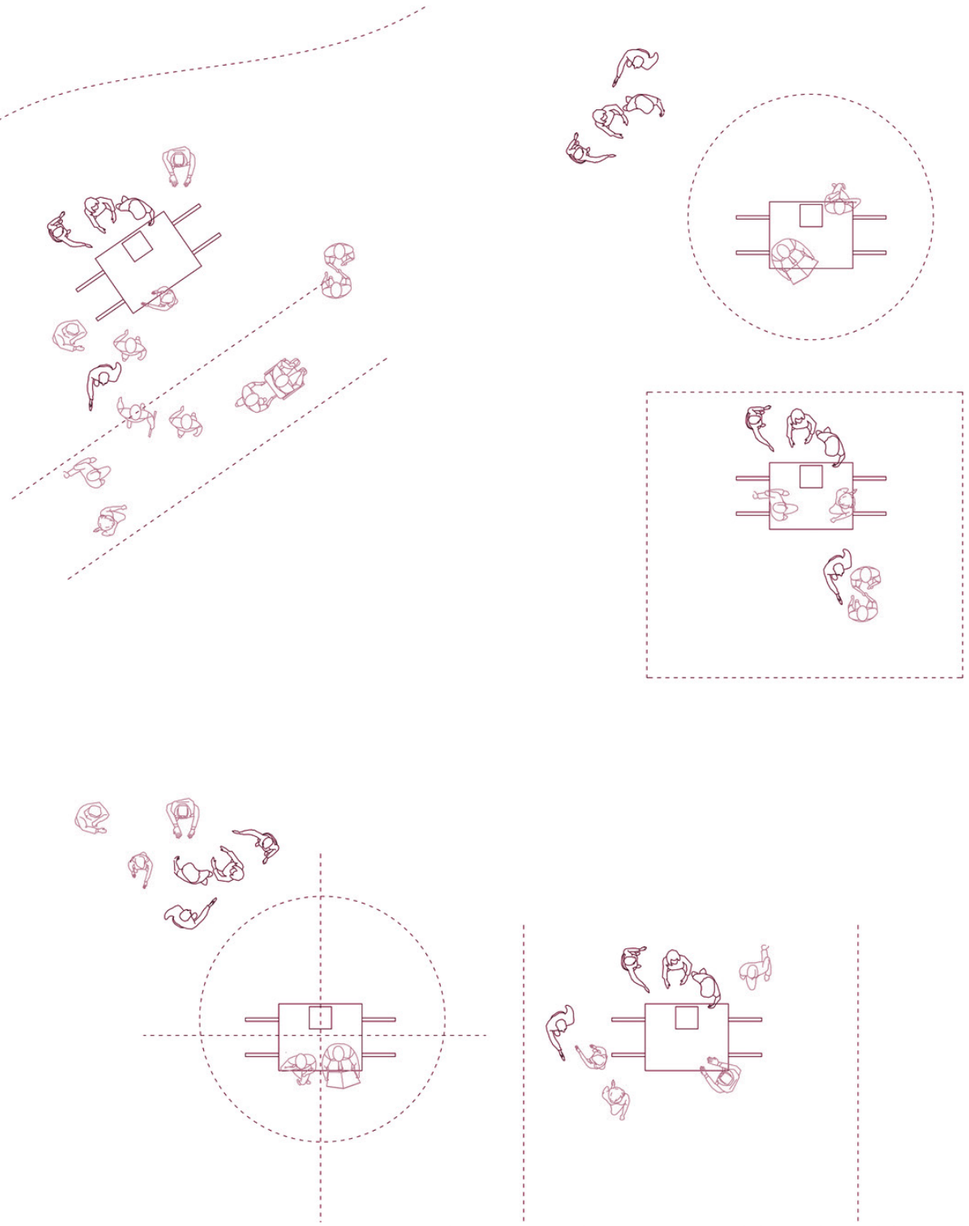

Fig.9 and10 - Drawings by Maria Luna Nobile, analysis of the interaction between the artefact, the space and the bodies in the three spaces.

explore the meaning of the term in languages that are at the core of this experimentation, going from Italy to Sweden:

In Italian, "radicale"[8] derives from the Latin radicalis, itself rooted in radix, meaning "root." This botanical association emphasises an origin or fundamental essence. Figuratively, "radical" signifies a profound or foundational change, touching the core of something - whether an institution, a system, or even an individual's life. The radical is thus both intimate and transformative, fundamentally altering the status quo from its very foundation (Enciclopedia Treccani).

In Swedish, “radikal”[9] is similarly derived from radicalis and emphasises roots or origins. Over time, the term has extended to imply something thorough and deeply penetrating. It is often associated with transformative actions that address an issue at its root, aiming for profound and lasting change (Svenska Akademiens Ordbok 1956).

The experiment involves the creation of a simple, minimalist structure: a platform, pure white in colour. Like an archetype, this platform becomes a space for engagement, interaction, and dialogue. The interaction revolves around the use of tea roots and plants, with the stone serving as a metaphor for fundamental exchange. Both the physical space and the narrative it evokes embody a radical concept - returning to the roots, to the original, yet also acting as a blank canvas, a starting point for discussions on intimate and profound visions. This dialogue ultimately invites reflection on perception of body and space within the urban context.

Finally, this experiment challenges and invites reconsideration of the foundations upon which perceptions of space, body, and interaction are built. Returning to the roots - both literal and metaphorical - it invites us to unveil the layers of biopower complexity that modern urban environments often impose. The platform, with its minimalist form and symbolic materials, is not just a space for dialogue, but an agent for dissensus. The project invites reflection on how to relate to one's surroundings and challenges the existing consensus about boundaries between nature and the built environment, between individual and collective experience. In doing so, it calls for a radical re-evaluation of how to inhabit the city and, more broadly, the world around us (Fig.11-12).

Rather than simply reminding that profound transformations often begin with the most elemental gestures - a *return to the root* - could this experiment, in its simplicity, align with Andrea Branzi's notion of a non-heroic, flexible approach to design? (Branzi 2006) In rethinking urban spaces and human interaction, could this return to the root be seen not just as a minimalist gesture, but as an open-ended invitation to reinterpret the boundaries between nature and the city? Can this fluid, adaptable structure serve as a new platform for understanding how to inhabit and transform urban environments?

Fig.11 and 12. Photos by Francesca Melina, experimentation during winter season, December 2024.

ACKNOWLEDGEMENT

The authors would like to thank for their active participation in the field experiment that was part of this research project: architect Danila Della Monica, ethnobotanist and forager Maria Eriksson (Bärande Produkter), visual and creative designer Gioele Bertin (Malomodo studio), Claudia, Dide, Eleonora, Stephanie, Silvia, Jonathan, photographers Raphael Avellar M. De Vargas and Laura Bisbe Armengol, UMA technicians Kent Brodin, Håkan Hansson, Sven-Erik Hilberer, Umeå School of Architecture and UmArts research centre and the community of researchers involved, and all the permanent or temporary inhabitants of Umeå who participated in our experiment.

NOTES

1. In this text we refer to the role of art and architecture practices in the era of the Anthropocene. A “new reality” in which our disciplines are facing the need of dealing with urgent topics in relation to the current environmental and consequential social crisis.

2. Authors' contribution: The authors jointly conceived and developed the approach and the overall objective and structure of the paper. Paragraphs: “Stente: Residual Zones” Project as an Experiment, Residues as the key conceptual element, Practical Experimentation on-Field, Further Reflections. Why Radical?, are to be attributed to Maria Luna Nobile; Paragraphs: Placing the matter in context, A new body-centred paradigm, Space and Commons, Art and Architecture as Commons´Activator, are to be attributed to Francesca Melina.

3. For more complete information on this topic visit: https://www.naturvardsverket.se/allemansratten. The law concerns the right to roam, camp and collect natural goods from forests and green areas surrounding urban agglomerations. It does not matter whether the space is regulated private or public. Some restrictions are applied to protect rare and wild green species. In general, the law considers access to and benefit from land as a common good.

4. The research project has its foundation in the UMA Research Group “Designing the contemporary city” and aims at testing the topic of reuse and reactivation through art and architecture in the city, Umeå is the main case study. Francesca Melina as visiting researcher and Danila Della Monica, as visiting master student, have been contributing to the group and been hosted at UMA in Spring 24.

5. The ethnobotanist and forager Maria Eriksson (Bärande Produkter) was fundamental in the process of knowing better the land and the herbs growing in the area. Due to seasonal reasons also foraging as a practice is confined to a specific time of the year: it seems to be the perfect link to address the accessibility of the land, the city and the common spaces going from nature to the urban dimension. All the wild herbs used during the experimentation were also known for their healing properties: each quality was explained to the public interacting with the device.

6. The call for participants and the dinner to meet the interested participants is an integral part of the participatory method aiming at involving as much as possible each person who will contribute in the experiment actively in the process. During the dinner participants had the chance to meet each other and discuss the main topics and have an impact on the design process.

7. The entire experiment lasted for three weeks. There were three days of the first round of field trips, from May 10 to 13. Then, after collecting initial results, a second round was implemented at the end of May, on May 24 and May 29. This is a starting basis from which to construct future possible experimentation.

8. Radicale adj. e s. m. and f. [from lat. tardo radicalis, der. di radix -icis «radice»; ing. radical]. – 1. In botany, which refers to the root: hair r.; r. apparatus; suckers r.; veil r., see velo1, n. 3 a; r. absorption, which takes place by the root hairs; r. leaves, impropriam., the basal leaves of the stem, which in certain plants appear to derive from the root. 2. fig. Which concerns the roots, the intimate essence of something: the foundation r. of the imperial majesty (Dante); to make a change in one's life, a turning point, full, total; r. renewal, r. reforms, which change or tend to change a system, an institution, etc., from the foundations (Enciclopedia Treccani).

9. Radikal [jfr t. radikal, eng. o. fr. radical; av senlat. radicalis, avledn. av lat. radix (gen. -icis), rot (se ROT)] 1. (nowadays hardly br.) bot. belonging to l. starting from the root of a plant etc. Radical shoots. BotN 1884, p. 30. 2. belonging to l. constituting the origin of something l. root; also: original, inherent; nowadays, among others in the case of something bad, usually. 3. which goes to something's root l. origin; usual in extended l. image l. anv., transitory in bet (Svenska Akademiens Ordbok, 1956).

BIBLIOGRAPHY

BRANZI, A. The Primitive Metropolis, Fortino Editions, Miami 2014.

BRANZI, A. the No-Stop City – Archizoom Associati, HYX, 2006.

CANESCHI, F. (2021). From Commons to Urban Commons. Complexity and contradiction in the translation of a concept. UOU Scientific Journal, (01). Retrieved from https://revistes.ua.es/uou/article/view/19512

CLEMENT, G. Il Manifesto del Terzo Paesaggio, Quodlibet ed. 2005 (it. translation) pp. 10-17.

DEVEREUX, M., Alvado Bañón, J., & Hadjisoteriou, M. (2021). Conversation on a common manifesto. UOU Scientific Journal, (01). Retrieved from https://revistes.ua.es/uou/article/view/20265

DODD, M., Spacial Practices. Modes of Action and Engagement with the City, London and New York, Routledge, 2020, pp. 33-57.

BERTRAM, G.W., L'arte come prassi umana, un'estetica, [2014] 2017, tr. it a cura di Bertinetto, A., e Vercellone, F., Milano, Raffaello Cortina Editore.

ENCYCLOPEDIA TRECCANI vocabolario online, Commons, https://www.treccani.it/enciclopedia/information-commons_(Lessico-del-XXI-Secolo)/ (accessed on the 13th of September 2024).

ENCYCLOPEDIA TRECCANI, vocabolario online, Radicale, https://www.treccani.it/vocabolario/radicale/ (accessed on the 9th of September 2024).

LÉVI-STRAUSS, C. *Tristi tropici*, Il Saggiatore, Milano 1968.

NOBILE, M.L. voce "ecologia" in ARCHITETTURA enciclopedia dell'architettura vol.2 a cura di Aldo De Poli, Motta Architettura − il sole 24 ore, 2007 p. 111.

NOBILE, M. L. (2021). An introduction: the need of a space for experimentation. UOU Scientific Journal, (01). Retrieved from https://revistes.ua.es/uou/article/view/20258

NOBILE, M. L., ed. (2021). COMMONS. UOU Scientific Journal, (01).

SOTTSASS, E. Archizoom in Domus 455, October 1967. Text published in Domus web 9 March 2023 “Nice chaps, but naughty”: Sottsass introducing Archizoom in the pages of Domus in the 60s. https://www.domusweb.it/en/from-the-archive/2012/10/13/archizoom-good-fellas.html (accessed on the 9th of September 2024).

SVENSKA AKADEMIENS ORDBOK, Radikal definition, 1956 https://www.saob.se/artikel/?unik=R_0001-0160.4iYS (accessed on the 9th of September 2024).

STAVRIDES, S. Common Space. The City as Commons, Zed Books 2016 p.2.

RANCIÉRE, J., Le partage du sensible. Esthetique et politique, La Fabrique editions, Paris, 2000; La partizione del sensibilie. Estetica e politica, Derive Approdi, Roma, 2016, pp. 15-23.

RENN, J., The Evolution of Knowledge. Rethinking Science for the Anthropocene, Princeton University Press, Princeton, 2020, pp. 12-13.

VERCELLONE, F., *Dopo la morte dell'arte*, Bologna, Il Mulino, 2013.