John R. Smythies' Theories of Mind, Matter, and N-Dimensional Space

Conspectus of part of his *Analysis of Perception* (1956)

— Peter Sjöstedt-H —
MMXVIII

John Raymond Smythies (b. 1922) is a neuroscientist and philosopher of mind, cousin to Richard Dawkins and Graham Greene. The following is a summary of his ideas on phenomenal space – the space of one's imagination, dreams, psychedelic experiences,[1] somatic sensations, visions, hynagogia, etc. – and its relation to physical space.

- '(visual and somatic) sense-data *really are* spatial entities.' (p. 13)
  - [This is in contradistinction to the common Cartesian belief that the fundamental difference between matter and mind is that matter is spatial (extended) and mind is non-spatial (unextended).]
    - 'Descartes made the mistake of confusing a part of the mind (the Ego and its thoughts) with the whole mind.' (p. 58)
      - [William James made a similar point earlier (1904).]
  - Smythies uses '**sense-data**' synonymously with '**sensation'**, which he also (p. 10) defines as that which changes in an '**experiential event**' (***e***).

- Smythies writes that visual sensations [such as imagining two triangles simultaneously] *are* spatial considering the fact that they have spatial properties and relations – thus (non-exhaustively):
  - Sensations/sense-data 'may be ***inside*** **or** ***outside*** other sense-data in a topological sense … . In general sense-data may satisfy many of the axioms and theorems of **topology**.' (p. 10)
    - '*Topology'*: 'A term meaning 'science of place' … . The branch of mathematics concerned with those properties of figures and surfaces which are independent of size and shape and are unchanged by any deformation that is continuous, neither creating new points nor fusing existing ones; hence, with those of abstract spaces that are invariant under homœomorphic transformations.' (*Oxford English Dictionary*)
  - 'Two sense-data may share, in part, a common **boundary**—i.e. they may be contiguous … [or] non-contiguous.' (pp. 10–11)
  - '*Some* sense-data … may be held to be "**punctuate**" and not extended. Even if so, and it is a debatable point [!], such sense-data can be ***located*** … and bear spatial relations to other sense-data…' (p. 11)

[1] At the start of Aldous Huxley's seminal book on psychedelics, *The Doors of Perception* (1954), he writes that 'at least one professional philosopher has taken mescalin for the light it may throw on such ancient, unsolved riddles as the place of mind in nature and the relationship between brain and consciousness'. The footnote here refers to John R. Smythies, and mentions his paper of 1953, 'The Mescaline Phenomena'.

- Individual sense-data are parts of the total visual field, and their location can be 'divided into **sections**—i.e. two hemispheres—**right and left**, or **upper and lower**; or four **quadrants**; or into a **central** region and a **peripheral** region; etc.' (p. 12)
- 'Sense-data also have **shapes** and (relative) **sizes** and may even be subjected to a form of **measurement** … [and] an **area''** (p. 13)

– Smythies next asks (with thought to mind and matter), 'How, in general, can a class of events *a* be related to a class of events *b*? There are five possible answers.' (p. 14)

i.	Identity of *a* and *b*	**(a=b)**
ii.	*a* as a proper subset of *b*	**(b (a))**
iii.	*b* as a proper subset of *a*	**(a (b))**
iv.	*a* and *b* intersect	**(a () b)**
v.	*a* and *b* as mutually exclusive	**(a) (b)**

– **How then may the class of events *e* [experiential events] be related to the class of events *p* [physical events]?**
  - [*That* is *the* question! The mind-body problem/hard problem of consciousness]

– **1. & 2**. Smythies writes that we 'can say at once that *e* and *p* cannot be identical, nor can *p* be a proper subset of *e*' (p. 15). [I.e. not i or ii]
  - i.e. not *naïve realism* [nor *idealism*].
  - Not **naïve realism** because the temporal index of a physical event such as star light-to-eye is non-identical to the temporal index of its perception.
    - [Smythies promotes a representationalist theory of perception, but that is, in my view, ultimately irrelevant to his views on spatiality.]
    - [He does not explain why 2. (idealism) cannot be the case, though dismisses it in passing on p. 30.]

– **3.** Smythies next considers the relation of p and e under relation iii (*e* as proper subset of *p*). He writes that this 'is the theory of **psycho-neural identity theory** which has been largely abandoned by neorologists' (p. 16).
  - [This statement itself is of interest because it is commonly held that the psycho-neural identity theory was first advanced in 1956 (by U. T. Place), but that is the year of this very book of Smythies who already rejects it.]
  - [*Psycho-neural identity theory* (PN-IdT) is the idea that a sensation simply (and strictly) *is* its 'correlated' brain process. That the two terms have the same referent, as do the 'morning star' and 'evening star' (i.e. Venus).]
  - [It may be wondered why Smythies considers PN-IdT as relation 3 (subset) rather than relation 1 (identity), considering its name and purport. But Smythies is fundamentally correct in this classification because PN-IdT does not take mind and matter to be identical but rather it eliminates mind to leave matter as fundamental (i.e. *e* as subset of *p*), thereby really forfeiting its right to call itself an 'identity' theory. (See my PhD thesis, chapter 4 for details.)]

- Smythies then uses the reality of the phenomenal space he described above against PN-IdT:
    - ‘Two groups of events arranged in a spatial order may not be said to be identical unless they are geometrically congruent. … [E]vents in the cerebral cortex … concerned in a particular perception are geometrically non-congruent with the sense-data that these events are alleged, under this [identity] theory, to be. … [This] can be used to refute with equal finality the theory of psycho-neural identity.’ (p. 16)

– **4.** *e* and *p cannot intersect* because at the intersection *e* and *p* would be *identical* (i.e. have the same referent), which, as we saw above cannot be correct.

– **5.** Smythies does *not* use the term *dualism*, and as we shall see this is fair. He begins by stating:

  - A *physical (p) spatial location* can be determined by ‘a system of co-ordinate axes OX, OY, OZ set at right angles to each other’ and with time (OT) (p. 23). As we saw with phenomenal spatiality, (*e*) can also have axes for location: ‘sense-data can certainly be located by using a set of co-ordinates’ (pp. 23–4)
  - Smythies then writes that the ‘location of sense-data is only quantitatively different and not qualitatively different from the location of physical objects, which we saw was also true in the case of measurements of sense-data and physical objects’ (p. 24).
    - That is, though the phenomenal spatial location using a set of axes may not be accurately determinable, this is neither the case in physical space. Location here is a matter of degree not of kind.

– Now, a fundamental question is asked:
  - **‘what are the spatial relations between these two sets of spatial axes at any time instant?**’ (p. 25)
  - There are only two possible answers he writes:
    - **Theory I:** ‘There may be no spatial relations between the two sets of axes.’ (p. 25)
    - **Theory II:** ‘The two sets may be conjoined to determine a single six-dimensional manifold.’ (p. 25)
  - i.e. ***Is phenomenal space separate from physical space*** *[a position taken by, e.g., H. H. Price, A. N. Whitehead and Bertrand Russell],* ***or is it conjoined in a single higher dimensional space?***

– If we delve deeper, we can fathom a further division of possibilities:
  - **I:** that each individual has their own separate phenomenal space, in which case we must (for phenomenal space) ‘use (*m* + 1) sets of co-ordinate axes in the case of ***m*** human individuals (with three spatial [and one temporal axis] in each set)’ (p. 25).

        - [It is not explained why the variable 'human' is mentioned (as presumably other organisms can have phenomenal space).]
        - Thus if there were 100 people in the universe, then there would be 100 three-dimension axes for the phenomenal spaces, plus one common physical 3D space (and one temporal dimension common to all).
            - In a footnote here (p. 25) Smythies acknowledges the disputability of assuming that only one temporal dimension could be common to all phenomenal spaces – it is 'beyond the scope of this book'. In other words, it could be the case that *separate phenomenal spaces have temporal dimensions incongruent with other phenomenal and physical spaces*. [This is something considered in, e.g., A. N. Whitehead's essay 'Uniformity and Contingency', in relation to dream time and the theories of Relativity.]
    - In this case (**I**), 'All these worlds ['**world** ≡ spatial system' (p.25)] would be quite separate and their contents would be held to bear no spatial relations to each other but only **temporal** relations, **causal** relations and relations of **class** membership' (p. 25).

- **II:** Alternatively, it may be the case that the phenomenal worlds are not separate but that 'the contents of each world [including the physical] … are spatially related' (p. 25) – (i.e. as well as related temporally, causally, and taxonomically).
    - In this case, rather than (*m* + 1) *sets* of axes, there would be **'a single (3*m* + 3) dimensional manifold'** (p. 25). (Or a [4m + 4] spatiotemporal manifold, if we include time as a dimension.)
        - i.e. (3-dimensions x number of individuals) + (3 dimensions of physical space) as one single spatial manifold.
        - [Note that it is assumed here the phenomenal space is three-dimensional. That it may be two-dimensional is an issue Smythies addresses (and rejects) in later papers.]

- 'In either case [I or II] we are dealing with a far-reaching development in cosmology … there is not one Space-Time (as is thought at present) but … there are many Space-Times.' (p. 27)
- In summary of this section Smythies writes:
    - 'In [I] the physical universe becomes but one of many spatial universes in which events ordered in a spatio-temporal system occur. In [II] the physical universe becomes merely a section of the total spatio-temporal Universe of events. … Thus to give a proper account of experiential events and their relation to brain events, we may have to exchange the four-dimensional geometry in current use in cosmology for an ***n*-dimensional geometry.**' (p. 27)
        - **'*n* = (3*m* + 3)'** (p. 28)
    - Summarized further:

- The two formal cosmological theories are:

    - ***THEORY I***: **'Sense-data ... are spatial entities distinct from physical objects and bear temporal and causal relations but no spatial relations to physical objects.'** (p. 27) – i.e. the exclusive theory.

    - ***THEORY II***: **'Sense data … are spatial entities distinct from physical objects and bear both temporal and causal relations and higher-dimensional spatial relations to physical objects.'** (p. 28) – i.e. the inclusive theory.

- Smythies now defines a **mind**:
    - 'A mind is a complex composite of sense-data organised into sense-fields, together with images, thoughts, affects and perhaps a Pure Ego.' (p. 28)
        - He then adds that the 'mind thus defined is a part of the total **organism**—an extra part which we have previously failed to recognise because of its particular geographical location and because some of its constituent parts (sense-data) have been confused with physical objects' (p. 28).
            - That is to say that because an organism fundamentally includes its mind, an organism is a higher-dimensional entity in its totality, such that a four-dimensional description of the organism cannot be sufficient.
            - 'There are also higher-dimensional geometries available to describe the (4m + 4)-dimensional spatio-temporal system of Theory II.' (p. 29)
            - In Appendix I, Smythies states that: '**There is no *a priori* reason why we should not develop the ability to appreciate directly an *n*-dimensional spatial system**.' (p. 124) *(n>3)*
                - [Smythies mentions the mescaline experience in this book (p. 47 – but only in respect to H. H. Price's version of Theory I). But I refer interested readers again to Smythies' 1953 paper (which inspired Aldous Huxley's *The Doors of Perception* [1954]), 'The Mescaline Phenomena'.]

- Smythies argues that both these theories are compatible with *psycho-neural interaction* and *psycho-neural parallelism*, which, he writes, are not essentially different on a Humean analysis of causation.
    - Note that 'psycho-neural interaction' (p. 29) is generally considered to be the causal operandi of *dualism* (that mind and body are distinct). But recall that Smythies (in Theory II) is advancing a single *n*-dimensional manifold, i.e. a *monism*. In fact, the very reality of phenomenal space is contrary to the axioms of Cartesian dualism (which denies extension to mental states). Against such a dualism, Smythies aims the following remarks:

- **'[The] spatiality of sense-data is given no less than their colour**.
- If the mind is thought to be non-spatial how can spatial sense-data and images belong to such a mind?
- How can that which is spatial belong to that which is non-spatial?
- How can an entity be both wholly non-spatial and spatial and
- How can a non-spatial whole be composed of spatial parts?' (p. 30)
    - It is thus interesting to note that Smythies rejects *both* the psycho-neural identity theory (a theory of materialism, or material **monism**) as well as rejecting the traditional theory of **dualism**. [So 'the physical is an abstraction']
    - Thus it is a 'pseudo-dilemma' to ask, "How can the unextended and non-spatial mind and the extended brain interact?" (p. 30)

[Smythies now goes through potential objections to this theory, and develops his 'television theory of perception' – which in this conspectus I shall omit.]

- Smythies refers to E. A. Abbott's classic novel *Flatland* (1926) – where the two-dimensional polygon people cannot sufficiently perceive nor imagine a three-dimensional world – when Smythies writes 'there is no a priori reason why there should not be higher-dimensional spatial relations between sense-data … on the one hand and physical objects on the other.' (p. 48)
    - Smythies points to Bertrand Russell on this possibility, specifically his texts *Mysticism and Logic* (1918) and *Human Knowledge* (1948), but claims that Russell tends towards Theory I.
- Developing Theories I and II, Smythies writes (p.54):
    - A is a point in a phenomenal space; B is a point in physical space.
    - If Theory II is true, then:
        - 'A cannot be the same point as B.'
        - 'There will be no line in the physical world parallel to AB.'
        - 'The angle ABC [where C is another synchronous point in physical space] will always be a right angle.' (see below)
    - If Theory I is true, then:
        - 'There can be no line joining A to B.'
        - 'There can be no such angle as ABC'.

- Smythies illustrates metaphorically the '**psychophysical geometry**' of Theory II *n*-dimensionality (in the Appendix II, p. 127) by means of a 4D tesseract: the inner cube represents physical space and six contiguous flat-top pyramids (which are additional 3D cubes illustrated perspectively) represent contiguous three-dimensional phenomenal spaces (where $m = 6$).

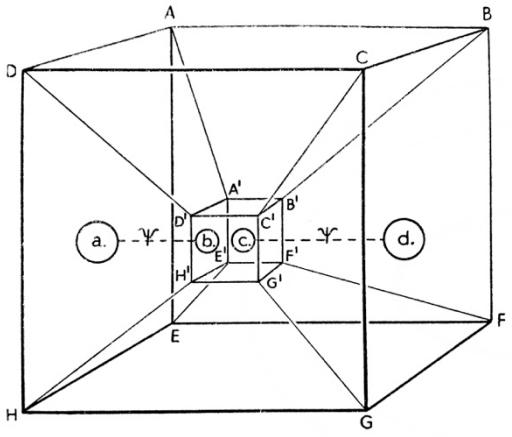

- [Note that this is a 3D representation of a 4D object, which as such cannot be imagined directly (at least for most of us without chemical assistance).]
- [But the location of a point in 4D space is easily represented algebraically. For the 3 axes (x, y, z) of 3D-space we can *locate* a *point-h* by 3 respective values – e.g. (x_2, y_3, z_4). For 4D-space we simply add another axis w: *point-h:(x_2, y_3, z_4, w_5).* And so on for D>4. This representational method is known as the *Cartesian coordinate system*.]
- [That 'angle ABC will always be a right angle' (p. 54) in Theory II is not elaborated upon by Smythies, but that axes *x, y, x* are orthogonal to one another serves at least inductively as reason for *w* to be orthogonal thereto yet again, notwithstanding the fact that such a possibility is intelligible for us conceptually rather than prosaically imaginably.]

– Smythies now considers the theories in relation to the **causal processes** between the **mind** and the **brain** – represented by *psi*: **ψ**
  - [In the philosophical tradition, we can generalize to say that there are three main options for such causation:
    - non-existent (if mind=matter [strict identity] then no causal path; or in parallelism);
    - interaction 1 – matter-to-mind (emergentism, epiphenomenalism);
    - interaction 2 – mind-to-matter (mental causation [inc. free will], in most emergentism, dualism, idealism [as projection], etc.)]
  - Theory I: **non-spatial causal processes** 'crossing the unimaginable void between the public physical spatial system and each private experiential spatial system' (p. 55).
    - [such causal processes would include those hypothesized to exist by the *transordinal nomologies/psychophysical bridge laws* of the emergentists [e.g. J. S. Mill, C.D. Broad]. That such laws are not laws of physics is one reason for the rejection of emergentism as an unscientific theory (e.g. by J. J. C. Smart [1959]).]
  - Smythies now splits Theory II into two further types so to address this **ψ** question:

- **Theory II A:**
  - The **'psychical spatial system'** is a term Smythies coins to refer to the possibility that the phenomenal spatial field at any specious present ***transcends*** that which is actually sensed.
    - 'Each private sensed spatial system may thus be set in or embedded in a larger unsensed system of the same dimensionality (i.e. the same set of three spatial axes…)' (p. 56)
    - There could exist in this theory '**unsensed psychical entites'** (p. 56).
    - [This is a rather radical proposal. If we applied it to phenomenal dream space, it would mean that the dream world extended beyond that which one actually experienced in one's dream: ***the dream would be larger than your experience of it*.**]
    - Further still, Smythies speculates that a '**psychical mechanism**' that forms one's actual sensations could lie un-sensed in this phenomenal space, thus also insensible in physical spatiality.
    - In the 2D Flatland (from Abbott), the inhabitants could perceive a x-y boundary, but they would be unaware that there was also a (x-y)-z connection ('interface'). Likewise, there could be an (x-y-z)-w interface for us:
      - 'Similarly our physical universe may be separated from each of our private universes by a dimensional interface, and our own private universes may be separated from those of other people by other dimensional interfaces.' (p. 57)
      - Smythies speculates that there could be ***transdimensional processes*** [i.e. only appearing systematic from a transdimensional perspective].
        - [Just as 3D processes would appear unsystematic, irregular, and largely obscured when interfacing a 2D Flatland.]
      - 'Normally the only transdimensional processes are conducted by ψ_y [connections of sensory areas of brain to the sense fields of experience] and ψ_x [process whereby will is transmitted to motor cortex], which correlate the phenomena occurring in all these worlds.' (p. 57)
      - 'There is no problem about how such processes could react with the brain as every point in the brain can be contiguous with the unsensed psychical mechanism.' (p. 57)
        - [i.e. via the (for us) unsensed dimensional interface between physical and unsensed phenomenal spatiality.]

- **Theory II B:**
    - ‘Sense-data … might still bear higher dimensional spatial relations to physical objects, yet there would be not any such unsensed psychical spatial system as postulated in Theory II A.’ (pp. 57–8)
        - **‘ψ** would then be a non-spatial causal process as described in Theory I.’ (p. 58)
        - But in contradistinction to Theory I, the Universe would still be a *single* (3m + 3) dimensional one rather than multifarious separate 3D universes.
        - Theory II B would have to stipulate ‘a non-spatial part connecting two spatial parts: the brain and the sensory fields’ (p. 58)
            - i.e. a causality that involves an aspatial bridge, as it were.
            - This is not impossible, Smythies says, and the competing hypotheses could be gauged in terms of plausibility via empirical means based on the different predictions that the theories could proffer – Smythies speculates.

– Smythies concludes by listing how these theories are advantageous to **Cartesian dualism.**
    - Such dualism cannot give an intelligible account of the **interaction** between sense-data and the brain.
    - Theories I & II both view an organism as a **unitary** mind-body entity, that cannot be parsed. In dualism the mind (soul) can live on after the (3D) body dies.
    - ‘The Cartesian dualism is a dualism of substance whereas the theories presented here are dualisms of spatial location. They are however **monistic** theories in the logical field of causal relation and organisation.’ (p. 59)
    - ‘It should be possible to investigate causal relations between a brain and a mind by constructing an “n”-dimensional physics based on an “n”-dimensional geometry’ (p. 59).

– Though Smythies rejects **dualism** it should be recalled that he also rejects the psychoneural **identity** theory. He also rejects, by implication of the spatial argument he sets forth above, **emergentist** theories:
    - ‘Nor do we have to postulate that cerebral events “underlie” mental events, or form a mysterious “substratum” for them’ (p.60)
        - This is because the three-dimensional space of the brain is not the totality of the space of reality, and is not a more fundamental ontology:
            - ‘it may be that an accurate and comprehensive neurological account of perception cannot be given solely in terms of physical objects including brains and the language system of physics, but it may have to include <sense-datum> among its basic terms’ (p. 60)

Thus Smythies offers hypotheses of the mind-matter relation based on an analysis of space. They are certainly speculative, but certainly speculations that can be analysed further (e.g. in relation to possible multiple temporal axes). It is of note that this book of Smythies begins (Prologue, p. xiii) with a long quotation – a suggestion from mathematician and metaphysician A. N. Whitehead:

> *'How do we know that only one geometry is relevant to the happenings of nature? … Perhaps in the dim future mankind, if it then exists, will look back to the queer, contracted three-dimensional universe from which the nobler, wider existence has emerged.'*
>
> (*Modes of Thought*)

– – –